PROJECT:

JEFFERSON MILL REDEVELOPMENT

1665 MAIN STREET, HOLDEN, MA

APPLICANT:

NORTH VILLAGE LOFTS, LLC

NEWTON, MA

LOCUS PLAN

SCALE: 1"=2,000'

DRAWING LIST:

SHEET #	TITLE
	EXISTING CONDITIONS PLAN (BY ANDRYSICK LAND SURVEYING)
C001	SITE PREPARATION PLAN
C100	OVERALL SITE PLAN
C101	LAYOUT AND MATERIALS PLAN
C102	GRADING AND DRAINAGE PLAN
C103	UTILITY PLAN
C104	PROFILES
C201	DETAILS 1
C202	DETAILS 2
C203	LINE OF SIGHT

APPLICANT
NORTH VILLAGE LOFTS, LLC
35 NORWOOD AVE
NEWTON, MA 02459

CIVIL ENGINEER
PVI SITE DESIGN, LLC
18 GLENDALE ROAD
NORWOOD, MA 02062

LAND SURVEYOR
ANDRYSICK LAND SURVEYING
206 WORCESTER ROAD
PRINCETON, MA 01541

ISSUED FOR SITE PLAN APPROVAL

MAY 13, 2021

PVI SITE DESIGN
PVI Site Design, LLC
Civil Engineering - Land Entitlements
Master Planning - Project Management
339-206-1030

LEGEND

775	EXISTING 5' CONTOUR
	EXISTING 1' CONTOUR
	EXISTING PAVEMENT
	GRANITE CURBING
	BIT. CONC. BERM
W	14" C.I. WATER MAIN
8" W	WATER SERVICE W/REDUCER
WV	WATER GATE
	HYDRANT
SV	WATER SHUT OFF
S	SEWER MANHOLE
S S	8" A.C. SEWER MAIN
FM	6" D.I. FORCE MAIN
G	GAS SERVICE
GV	GAS GATE
	CATCH BASIN
	DRAIN MANHOLE
	DRAIN LINE
	UTILITY POLE
OHW	OVERHEAD WIRES
T	BURIED CABLE TELEPHONE LINE
	WATER EDGE
	WATER EDGE UNDER BUILDING
	ZONE LINE
	WOODEN FENCE
	CHAIN LINK FENCE
	GUARD RAIL
	SIGN
	LIGHT
766x4	SPOT GRADE

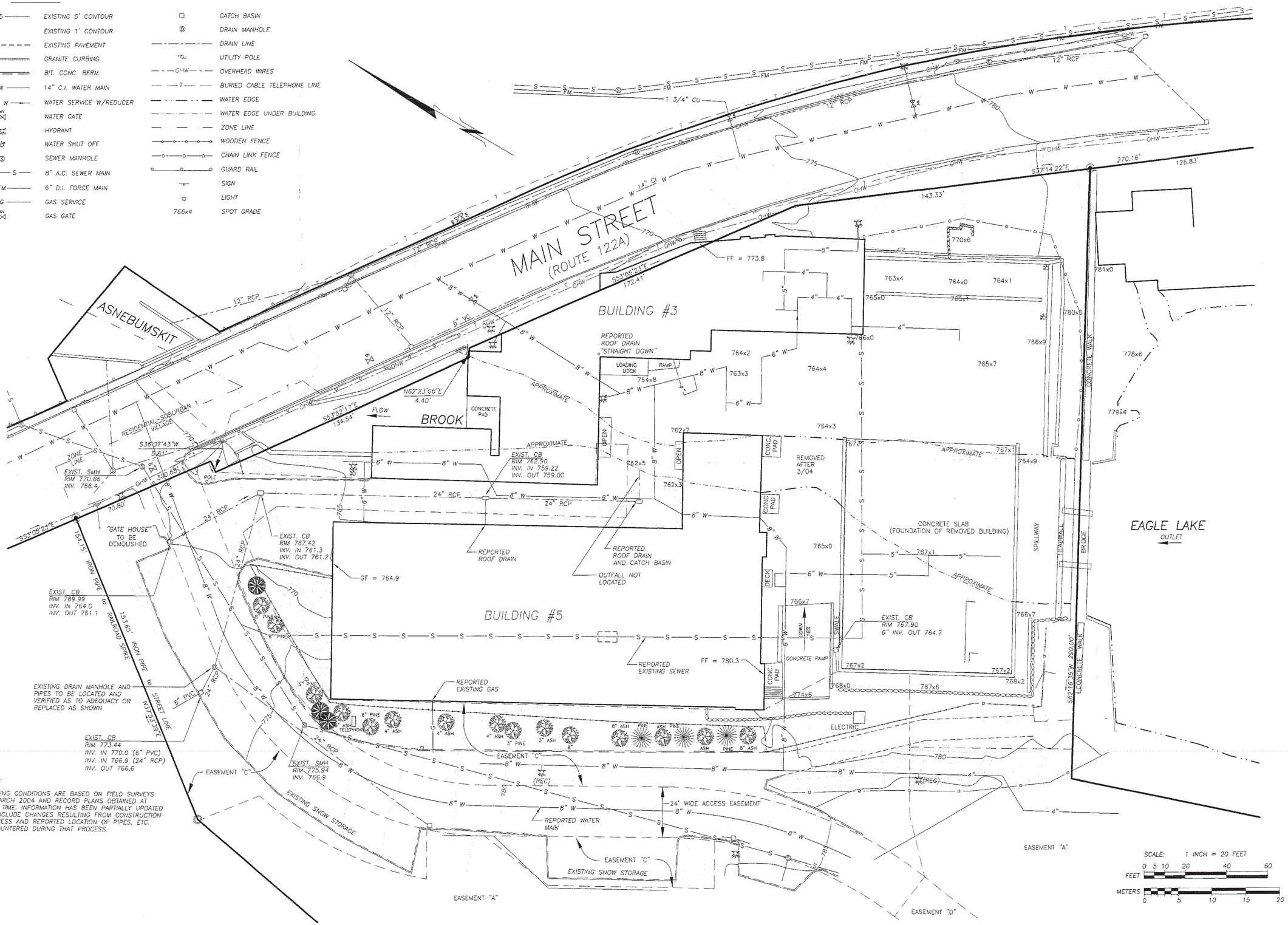

NOTE:

EXISTING CONDITIONS ARE BASED ON FIELD SURVEYS IN MARCH 2004 AND RECORD PLANS OBTAINED AT THAT TIME. INFORMATION HAS BEEN PARTIALLY UPDATED TO INCLUDE CHANGES RESULTING FROM CONSTRUCTION PROCESS AND REPORTED LOCATION OF PIPES, ETC. ENCOUNTERED DURING THAT PROCESS.

206 WORCESTER RD.
P.O. BOX 97
PRINCETON, MA 01541
PH. (978) 464-5890
FAX (978) 464-5383

Andrysick Land Surveying
An Office of Acton Survey & Engineering, Inc.

No	DATE	DESCRIPTION
5	9/5/12	UPDATE APPLICANT INFO
4	2/21/06	DCR COMMENTS
3	12/06/05	REVISE UPPER PARKING
2	11/17/05	DCR COMMENTS
1	8/16/05	TOWN COMMENTS

REVISIONS

PREPARED FOR:
MILL POND REALTY TRUST
74 CLARENDON ST, SUITE A
BOSTON, MA 02116

EXISTING CONDITIONS PLAN

SCALE: 1"=20'

"JEFFERSON MILL"
SITE PLAN
1665 MAIN STREET
HOLDEN, MASSACHUSETTS

JUNE 28, 2005

EXISTING CONDITIONS

8248 - 1/7

SITE PREPARATION NOTES

1. THE OWNER'S REPRESENTATIVE SHALL BE CONSULTED AND WILL REVIEW THE WORK ON SITE WITH THE CONTRACTOR BEFORE ANY WORK SHALL COMMENCE.
2. THE CONTRACTOR SHALL VERIFY ALL EXISTING CONDITIONS IN THE FIELD AND REPORT ANY DISCREPANCIES BETWEEN PLANS AND ACTUAL CONDITIONS TO THE OWNER'S REPRESENTATIVE PRIOR TO STARTING WORK.
3. THE CONTRACTOR IS RESPONSIBLE FOR ANY DAMAGE TO EXISTING CONDITIONS TO REMAIN THAT ARE DUE TO CONTRACTOR OPERATIONS.
4. ALL ITEMS TO BE REMOVED THAT ARE NOT STOCKPILED FOR LATER REUSE ON THE PROJECT OR DELIVERED TO THE OWNER SHALL BE LEGALLY DISPOSED OF OFF SITE BY THE CONTRACTOR.
5. THE CONTRACTOR SHALL BE RESPONSIBLE FOR COORDINATING HIS EFFORTS OF THE DEMOLITION WITH ALL TRADES.
6. THE CONTRACTOR SHALL COORDINATE ALL ADJUSTMENT OR ABANDONMENT OF UTILITIES WITH THE RESPECTIVE UTILITY COMPANY.
7. THE CONTRACTOR SHALL MAINTAIN OR ADJUST TO NEW FINISH GRADE AS NECESSARY ALL UTILITY AND SITE STRUCTURES SUCH AS LIGHT POLES, SIGN POLES, MAN HOLES, CATCH BASINS, HAND HOLES, WATER AND GAS GATES, HYDRANTS, ETC., FROM MAINTAINED UTILITY AND SITE SYSTEMS UNLESS OTHERWISE NOTED OR DIRECTED BY THE OWNER'S REPRESENTATIVE.

UTILITY REMOVAL / ABANDOMENT NOTES

1. ALL EXISTING UTILITY SERVICES TO BE REMOVED SHALL BE CUT AND CAPPED AT THE MAIN UNLESS OTHERWISE NOTED.
2. AT THE DIRECTION OF THE ENGINEER, AN OUT OF SERVICE UTILITY MAY BE ABANDONED IN PLACE WHEN NOT CONFLICTING WITH PROPOSED WORK. ABANDONED LINES SHALL BE CAPPED AND LOCATION IDENTIFIED ON FINAL AS-BUILT PLANS.
3. WHEN EXISTING UTILITY PIPE TO BE ABANDONED IS IN CONFLICT WITH OR WITHIN 12' VERTICALLY OF PROPOSED CONSTRUCTION, THE SECTION OF PIPE SHALL BE REMOVED OUTSIDE THE ZONE OF INFLUENCE OF THE WORK OR 4-FEET BEYOND THE LIMIT OF WORK, WHICHEVER IS GREATER.

SITE PREPARATION LEGEND

- PROPERTY LINE
- EXISTING BUILDING
- CONSTRUCTION FENCE
- UTILITY REMOVAL / ABANDONMENT
- HAYBALES WITH SILTATION FENCE
- BIT. CONC. PAVEMENT REMOVAL
- EXISTING TREE TO BE PROTECTED DURING CONSTRUCTION
- EXISTING TREE TO BE REMOVED
- EXISTING HYDRANT TO BE REMOVED
- INLET PROTECTION

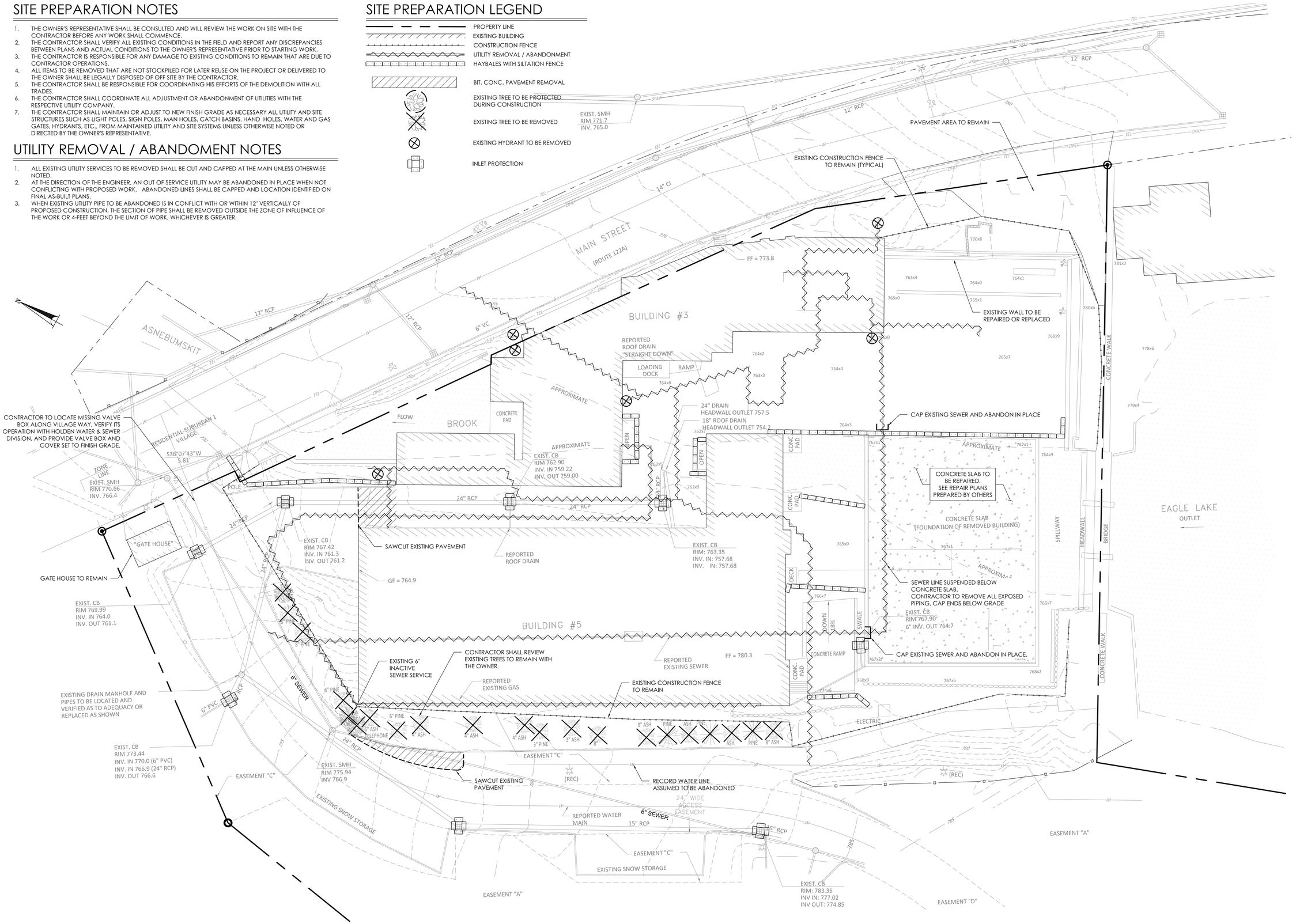

CONSULTANT:

PVI SITE DESIGN
PVI Site Design LLC
Civil Engineering • Land Entitlements
Master Planning • Project Management
339-206-1030

PROJECT:
JEFFERSON MILL REDEVELOPMENT
1665 MAIN STREET, HOLDEN, MA

CLIENT / APPLICANT:
NORTH VILLAGE LOFTS, LLC
35 NORWOOD AVE
NEWTON, MA 02459

REV.:		
1:	03-29-2021	DPW AND P.B. COMMENTS
2:	04-16-2021	DPW COMMENTS
3:	05-13-2021	NEW S.P.A. PLANS

SEAL: COMMONWEALTH OF MASSACHUSETTS — TIMOTHY J. POWER — CIVIL — No. 46908 — REGISTERED PROFESSIONAL ENGINEER

ISSUED FOR SITE PLAN REVIEW
JANUARY 29, 2021

SITE PREPARATION PLAN

SCALE:	AS NOTED
JOB NO:	21-001
FILE:	21-001_SITE PREP.dwg
DRAWN:	TJP
CHECKED:	TJP
SHEET NO:	C001

NOTES

1. OVERALL LOT BOUNDARIES ARE BASED ON GIS INFORMAITON OBTAINED BY THE MAPS ONLINE WEBSITE FOR THE TOWN OF HOLDEN AND SHOULD BE CONSIDERED APPROXIMATE.
2. ABUTTER INFORMATION OBTAINED FROM TOWN OF HOLDEN GIS SYSTEM.

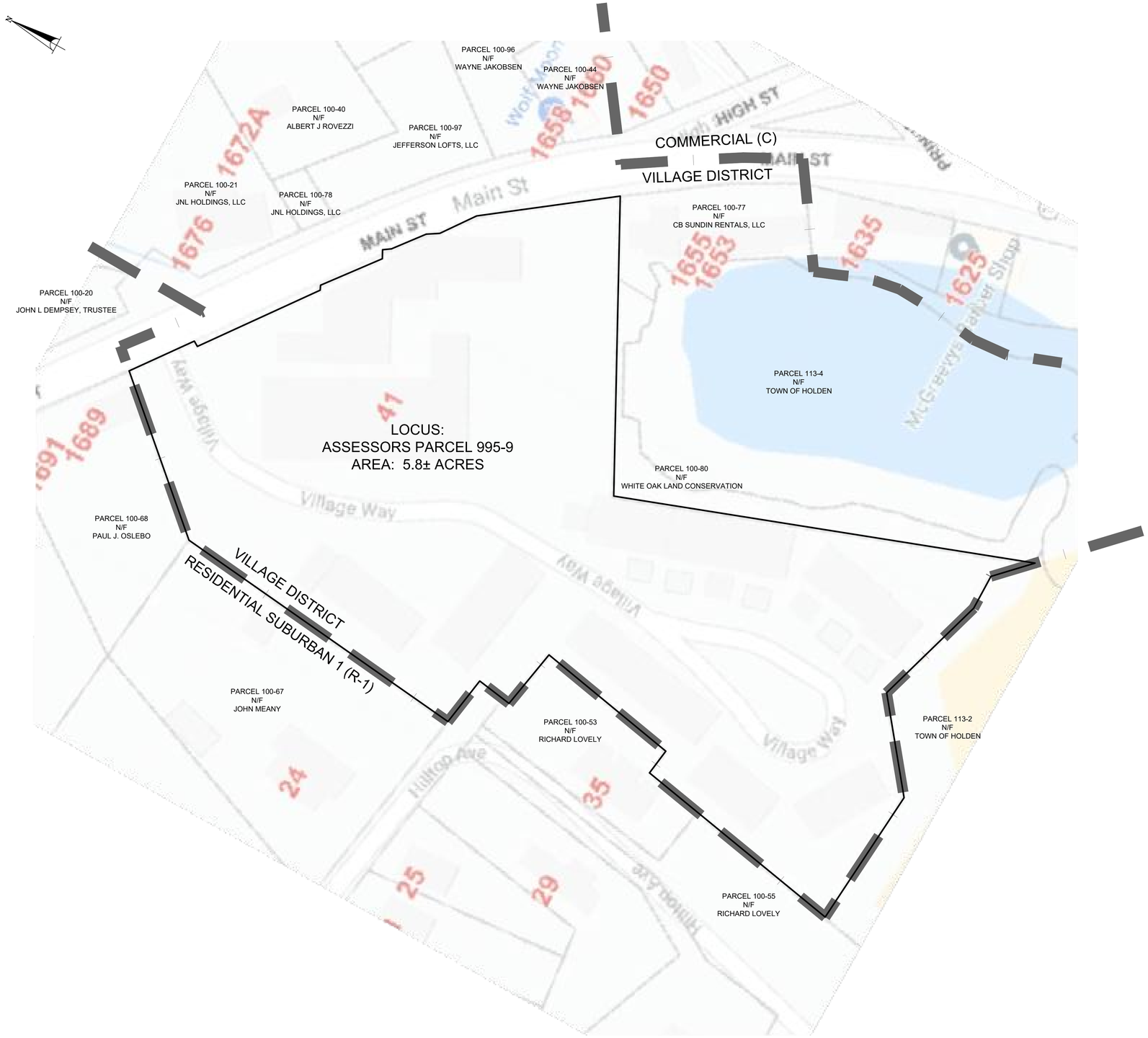

0' 25' 50' 100'

CONSULTANT:

PVI SITE DESIGN
PVI Site Design LLC
Civil Engineering - Land Entitlements
Master Planning - Project Management
339-206-1030

PROJECT:

JEFFERSON MILL REDEVELOPMENT
1665 MAIN STREET, HOLDEN, MA

CLIENT / APPLICANT:

NORTH VILLAGE LOFTS, LLC
35 NORWOOD AVE
NEWTON, MA 02459

REV.:		
1:	03-29-2021	DPW AND P.B. COMMENTS
2:	04-16-2021	DPW COMMENTS
3:	05-13-2021	NEW S.P.A. PLANS

SEAL:

COMMONWEALTH OF MASSACHUSETTS
TIMOTHY J. POWER
CIVIL
No. 46906
REGISTERED PROFESSIONAL ENGINEER

ISSUED FOR SITE PLAN REVIEW
JANUARY 29, 2021

OVERALL PROPERTY PLAN

SCALE:	*AS NOTED*
JOB NO:	*21-001*
FILE:	*21-001_LM.dwg*
DRAWN:	*TJP*
CHECKED:	*TJP*
SHEET NO:	C100

LAYOUT AND MATERIALS LEGEND

- PROPERTY LINE
- APPROX. RIVER EDGE
- PROPERTY SETBACK
- RIVER OPEN TO ABOVE
- EXISTING BUILDING
- PROPOSED BUILDING
- PROPOSED RETAINING WALL
- WOOD GUARDRAIL
- FENCE
- HAYBALES WITH SILTATION FENCE
- SPECIALTY PAVEMENT
- CEMENT CONCRETE PAVEMENT
- VGC — VERTICAL GRANITE CURB
- BCC — BITUMINOUS CONCRETE CURB
- ICC — INTEGRAL CONCRETE CURB
- FC — FLUSH CURB
- BENCH
- SITE LIGHTING
- WALKWAY/BOLLARD LIGHTING
- BIKE RACK

GENERAL NOTES

1. EXISTING CONDITIONS INFORMATION IS REPRODUCED FROM THE SURVEY PREPARED BY ANDRYSICK LAND SURVEYING LAST REVISED 9/5/2012.
2. SCREENED IMAGES SHOW EXISTING CONDITIONS. WHERE EXISTING CONDITIONS LIE UNDER OR ARE IMPINGED UPON BY PROPOSED BUILDINGS AND/OR SITE ELEMENTS, THE EXISTING CONDITION WILL BE REMOVED. ABANDONED AND/OR CAPPED OR DEMOLISHED AS REQUIRED.
3. THE LOCATIONS OF UNDERGROUND UTILITIES SHOWN ARE BASED ON THE SURVEY REFERENCED ABOVE. PRIOR TO THE START OF ANY EXCAVATION, THE CONTRACTOR SHALL NOTIFY DIGSAFE AND THE PROPER LOCAL AUTHORITIES OR RESPECTIVE UTILITY COMPANIES TO CONFIRM THE LOCATION OF ALL EXISTING UTILITIES. ANY DAMAGE DUE TO FAILURE OF THE CONTRACTOR TO CONTACT THE PROPER AUTHORITIES SHALL BE BORNE BY THE CONTRACTOR.
4. CONTRACTOR SHALL THOROUGHLY FAMILIARIZE THEMSELVES WITH ALL CONSTRUCTION DOCUMENTS, SPECIFICATIONS AND SITE CONDITIONS PRIOR TO BIDDING AND PRIOR TO CONSTRUCTION.
5. ANY DISCREPANCIES BETWEEN DRAWINGS, SPECIFICATIONS, AND SITE CONDITIONS SHALL BE REPORTED IMMEDIATELY TO THE OWNER'S REPRESENTATIVE FOR CLARIFICATION AND RESOLUTION PRIOR TO BIDDING OR CONSTRUCTION.
6. THE CONTRACTOR IS RESPONSIBLE FOR ANY DAMAGE TO EXISTING CONDITIONS TO REMAIN THAT ARE DUE TO CONTRACTOR OPERATIONS.
7. ALL ITEMS TO BE REMOVED THAT ARE NOT STOCKPILED FOR LATER REUSE ON THE PROJECT OR DELIVERED TO THE OWNER SHALL BE LEGALLY DISPOSED OF BY THE CONTRACTOR.
8. THE CONTRACTOR SHALL COORDINATE ALL ADJUSTMENT OR ABANDONMENT OF UTILITIES WITH THE RESPECTIVE UTILITY COMPANY.
9. ALL RETAINING WALLS GREATER THAN 4-FEET IN HEIGHT SHALL BE DESIGNED AND INSPECTED DURING CONSTRUCTION BY A REGISTERED STRUCTURAL ENGINEER.

LAYOUT AND MATERIALS NOTES

1. ALL WORK CONDUCTED WITHIN THE PUBLIC RIGHT-OF-WAY SHALL CONFORM TO THE REQUIREMENTS AND SPECIFICATIONS OF THE LOCAL MUNICIPALITY.
2. ACCESSIBLE CURB RAMPS SHALL BE PER THE MASSACHUSETTS ARCHITECTURAL ACCESS BOARD (MAAB) AND THE AMERICANS WITH DISABILITIES ACT (ADA) ACCESSIBILITY GUIDELINES, WHICHEVER IS MORE STRINGENT.
3. ALL WALKWAYS AND HANDICAP PARKING SPACES SHALL COMPLY WITH THE MAAB AND ADA ACCESSIBILIDY GUIDELINES. IF FIELD CONDITIONS MAKE IT IMPOSSIBLE TO COMPLY WITH THESE GUIDELINES AND REGULATIONS, A WAIVER FROM THE MAAB WILL BE SOUGHT.
4. THE FOLLOWING CRITERIA SHALL CONTROL UNLESS OTHERWISE NOTED ON THE PLAN:
   - ALL DIMENSIONS ARE TO THE OUTSIDE FACE OF BUILDING.
   - ALL DIMENSIONS ARE TO THE FACE OF CURB AT GUTTER LINE.
   - ALL DIMENSIONS ARE TO CENTER OF PAVEMENT MARKINGS.
   - ALL TIES TO PROPERTY LINES ARE PERPENDICULAR TO THE PROPERTY LINE UNLESS OTHERWISE NOTED.

PARKING TABLE

REQUIRED PARKING:
TOTAL PROPOSED UNITS: 47
ZONING REQUIRED PARKING RATIO: 1.5 SPACES PER UNIT
47 x 1.5 = 70.5

TOTAL REQUIRED PARKING: 71

PARKING PROVIDED:

VILLAGE WAY:	28
INTERIOR DIRECT:	42
INTERIOR TANDEM:	22
TOTAL SPACES:	92

ACCESSIBLE SPACES: 4 (INTERNAL)

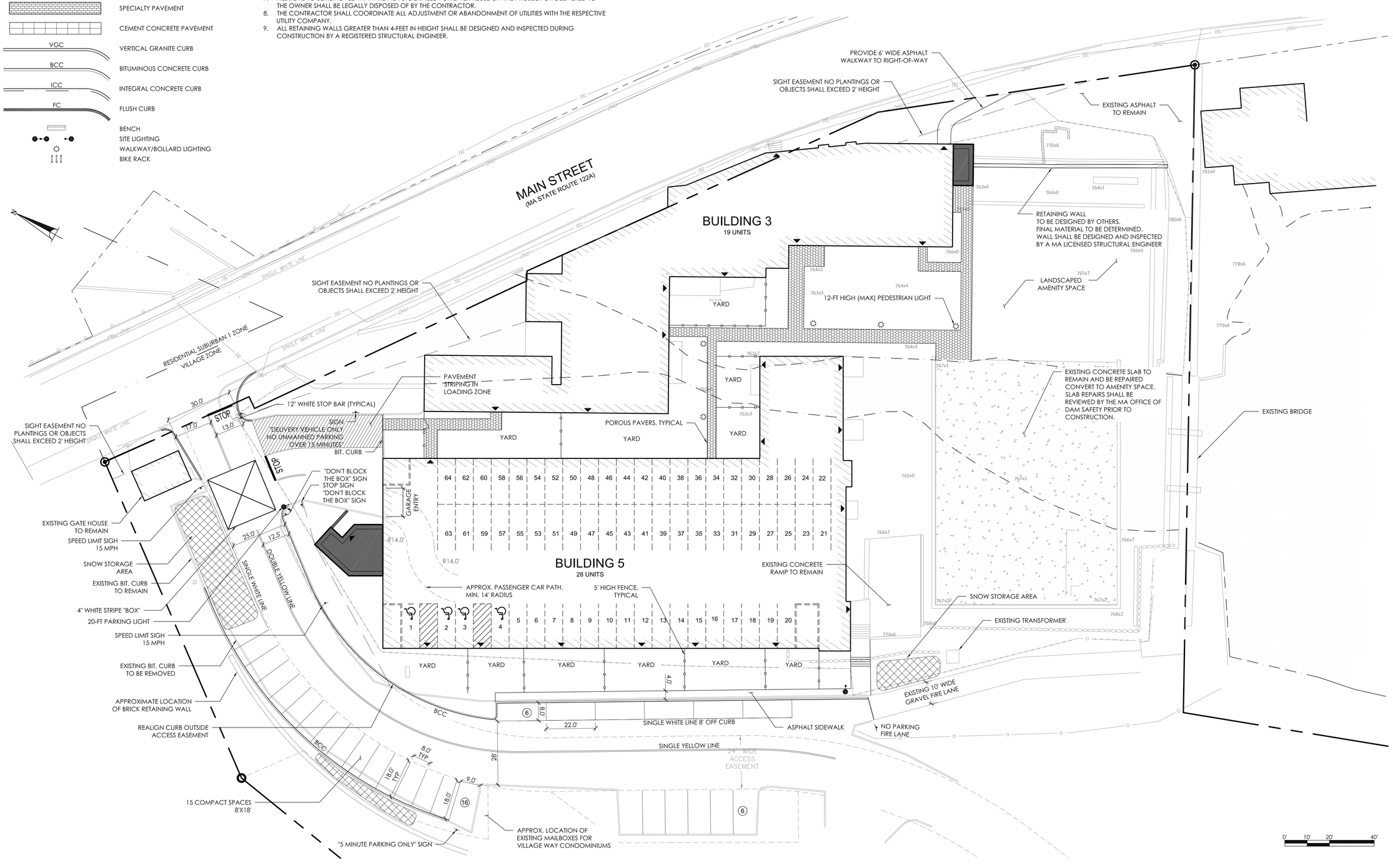

CONSULTANT:

PVI SITE DESIGN
PVI Site Design, LLC
Civil Engineering • Land Entitlements
Master Planning • Project Management
339-206-1030

PROJECT:
JEFFERSON MILL REDEVELOPMENT
1665 MAIN STREET, HOLDEN, MA

CLIENT / APPLICANT:
NORTH VILLAGE LOFTS, LLC
35 NORWOOD AVE
NEWTON, MA 02459

REV.:		
1: 03-29-2021	DPW AND P.B. COMMENTS	
2: 04-16-2021	DPW COMMENTS	
3: 05-13-2021	NEW S.P.A. PLANS	

SEAL: COMMONWEALTH OF MASSACHUSETTS — TIMOTHY J. POWER — CIVIL — No. 46908 — REGISTERED PROFESSIONAL ENGINEER

ISSUED FOR SITE PLAN REVIEW
JANUARY 29, 2021

LAYOUT AND MATERIALS PLAN

SCALE:	AS NOTED
JOB NO:	21-001
FILE:	21-001_LM.dwg
DRAWN:	TJP
CHECKED:	TJP
SHEET NO:	C101

GRADING AND UTILITY LEGEND

- PROPERTY LINE
- PROPERTY SETBACK
- EXISTING BUILDING
- W — EXISTING WATER SERVICE
- S — EXISTING SEWER SERVICE
- 97 — EXISTING CONTOUR LINE
- PROPOSED BUILDING
- PROPOSED RETAINING WALL
- 100 — PROPOSED CONTOUR MAJOR LINE
- 102 — PROPOSED CONTOUR MINOR LINE
- WD — PROPOSED DOMESTIC WATER
- WF — PROPOSED FIRE PROTECTION
- S — PROPOSED SEWER
- PROPOSED DRAIN LINE
- ETC — PROPOSED ELECTRIC DISTRIBUTION
- G — PROPOSED GAS
- PROPOSED UNDERGROUND CHAMBERS
- PROPOSED DETENTION SYSTEM LIMITS
- PROPOSED LIGHT POLE
- D — PROPOSED DRAIN MANHOLE
- D — PROPOSED CATCH BASIN
- PROPOSED FLARED END SECTION
- S — PROPOSED SEWER MANHOLE
- PROPOSED CLEAN OUT
- PROPOSED HYDRANT
- PROPOSED VALVE
- T — PROPOSED TRANSFORMER
- × 81.61 — PROPOSED SPOT GRADE
- PROPOSED BUILDING ENTRY POINT

GRADING NOTES

1. CONTRACTOR TO ADJUST UTILITY ELEMENT MEANT TO BE FLUSH WITH GRADE (CLEAN-OUTS, UTILITY MANHOLES, CATCH BASINS, INLETS, ETC.) THAT IS AFFECTED BY SITE WORK OR GRADE CHANGES, WHETHER SPECIFICALLY NOTED ON PLANS OR NOT.
2. WHERE AN EXISTING UTILITY IS FOUND TO CONFLICT WITH THE PROPOSED WORK, THE LOCATION, ELEVATION, AND SIZE OF THE UTILITY SHALL BE ACCURATELY DETERMINED WITHOUT DELAY BY THE CONTRACTOR, AND THE INFORMATION FURNISHED TO THE ENGINEER FOR RESOLUTION OF THE CONFLICT.
3. THE CONTRACTOR SHALL ALTER THE MASONRY OF THE TOP SECTION OF ALL EXISTING DRAINAGE STRUCTURES AS NECESSARY FOR CHANGES IN GRADE, AND RESET ALL WATER AND DRAINAGE FRAMES, GRATES, AND BOXES TO THE PROPOSED FINISH SURFACE GRADE.
4. THE CONTRACTOR SHALL MAKE ALL ARRANGEMENTS FOR THE ALTERATION AND ADJUSTMENT OF ALL GAS, ELECTRIC, TELEPHONE, AND ANY OTHER PRIVATE UTILITIES BY THE UTILITY COMPANIES.
5. CONTRACTOR SHALL MAINTAIN, OR ADJUST TO NEW FINISH GRADE, AS NECESSARY ALL UTILITY AND SITE STRUCTURES SUCH AS: LIGHT POLES, SIGN POLES, MANHOLES, CATCH BASINS, HAND HOLES, WATER AND GAS GATES, HYDRANTS, ETC., FROM MAINTAINED UTILITY AND SITE SYSTEMS, UNLESS OTHERWISE NOTED OR DIRECTED BY OWNER'S REPRESENTATIVE.
6. AREAS OUTSIDE THE LIMITS OF PROPOSED WORK DISTURBED BY THE CONTRACTOR'S OPERATIONS SHALL BE RESTORED BY THE CONTRACTOR TO THEIR ORIGINAL CONDITION, AT THE CONTRACTOR'S EXPENSE.
7. PROTECT AND MAINTAIN EXISTING ON-SITE DRAINAGE STRUCTURES AND PIPES UNLESS OTHERWISE NOTED.
8. WHERE PROPOSED GRADES MEET EXISTING GRADES, CONTRACTOR SHALL BLEND GRADES TO PROVIDE A SMOOTH TRANSITION BETWEEN EXISTING AND NEW WORK. PONDING AT TRANSITION AREAS WILL NOT BE ALLOWED.
9. CONTRACTOR SHALL MAINTAIN POSITIVE DRAINAGE AWAY FROM ALL BUILDING FOUNDATIONS, STRUCTURES AND PLANTING BEDS.
10. MAXIMUM SLOPE IN DISTURBED AREAS SHALL NOT EXCEED 3:1, UNLESS OTHERWISE NOTED.
11. ENSURE ALL EXISTING (TO REMAIN), AND PROPOSED MANHOLE COVERS PROPERLY IDENTIFY UTILITY SERVICED.
12. CONTRACTOR SHALL VERIFY EXISTING GRADES AND NOTIFY OWNER'S REPRESENTATIVE OF ANY DISCREPANCIES.
13. BITUMINOUS CONCRETE ELEVATIONS AT CATCH BASINS TO BE 1/4 INCH ABOVE RIM ELEVATION SHOWN FOR BASIN.

WATER QUALITY STRUCTURE NOTES

1. WATER QUALITY UNITS SHALL BE CDS2015-4 OR LARGER AS MANUFACTURED BY CONTECH. SEE DETAILS.
2. PROVIDE COVERS AS NOTED ON THE DRAWINGS.
3. WATER QUALITY UNITS SHALL BE SIZED TO TREAT 1" OF RAINFALL OVER PAVED SURFACES. FLOW RATES TO BE TREATED ARE AS FOLLOWS:
   WQ-1: TREATMENT FLOW = 0.5 CFS
   BY-PASS FLOW = 17.83 CFS
4. CONTRACTOR SHALL PROVIDE SHOP DRAWING FOR STRUCTURE WITH FLOW CAPACITY AND TREATMENT CAPACITY.
5. STRUCTURES SHALL BE CAPABLE OF REMOVING 80% TSS FOR THE REQUIRED WATER QUALITY VOLUME NOTED ABOVE.

ILLICIT DISCHARGE STATEMENT

1. THE STORM WATER MANAGEMENT SYSTEM PROPOSED SHALL NOT BE CONNECTED TO THE WASTEWATER MANAGEMENT SYSTEM AND SHALL NOT BE CONTAMINATED BY CONTACT WITH PROCESS WASTES, RAW MATERIALS, TOXIC POLLUTANTS, HAZARDOUS SUBSTANCES, OIL, OR GREASE PER MASSACHUSETTS DEP STORM WATER STANDARD 10.
2. IF ANY ILLICIT DISCHARGES ARE DISCOVERED DURING CONSTRUCTION, THE CONTRACTOR SHALL NOTIFY THE ENGINEER, AND DISCONNECT THE ILLICIT CONNECTION FROM THE STORMWATER SYSTEM.

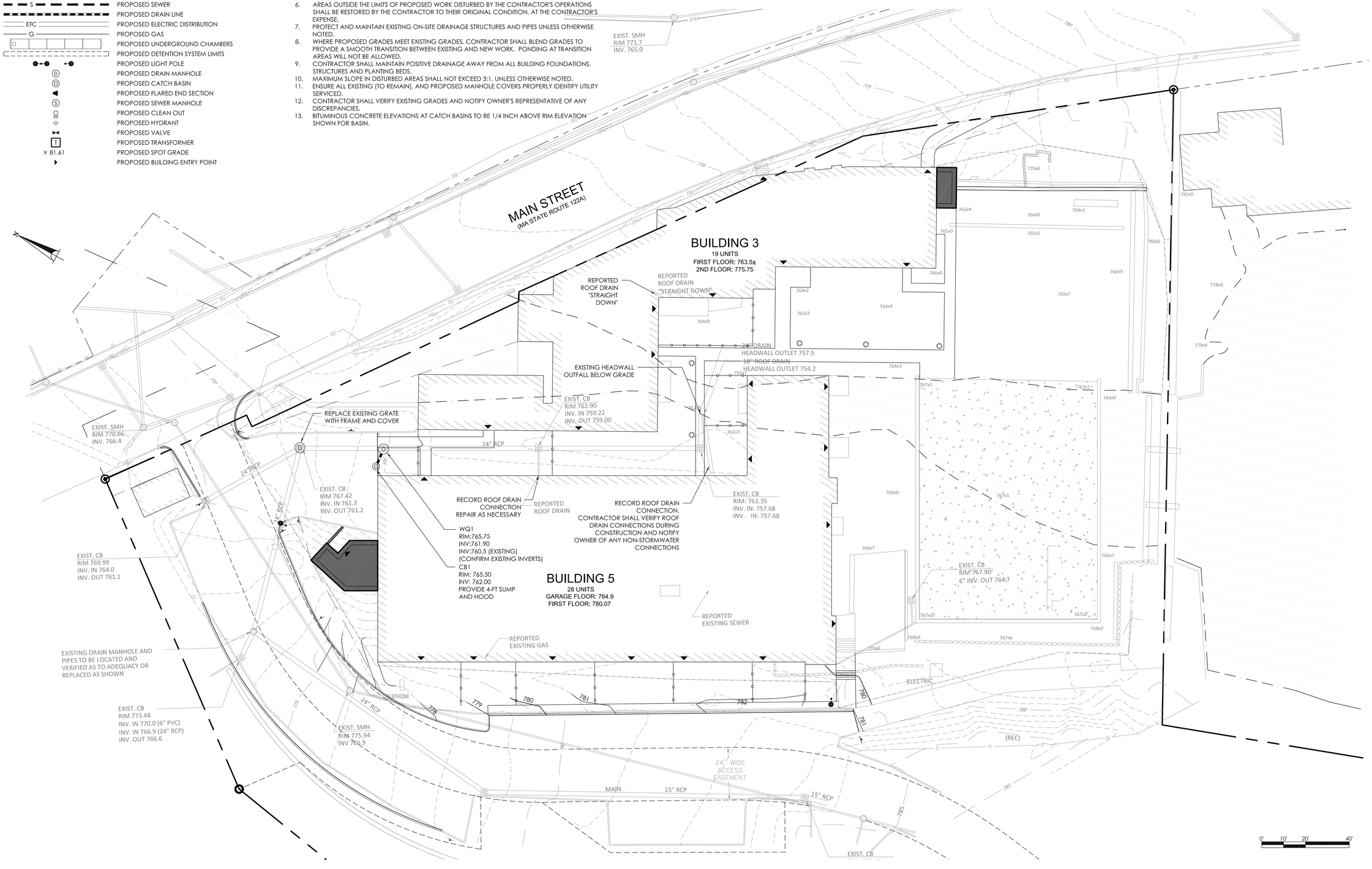

CONSULTANT:

PVI SITE DESIGN
PVI Site Design LLC
Civil Engineering - Land Entitlements
Master Planning - Project Management
339-206-1030

PROJECT:
JEFFERSON MILL REDEVELOPMENT
1665 MAIN STREET, HOLDEN, MA

CLIENT / APPLICANT:
NORTH VILLAGE LOFTS, LLC
35 NORWOOD AVE
NEWTON, MA 02459

REV.:		
1:	03-29-2021	DPW AND P.B. COMMENTS
2:	04-15-2021	DPW COMMENTS
3:	05-13-2021	NEW S.P.A. PLANS

SEAL: COMMONWEALTH OF MASSACHUSETTS — TIMOTHY J. POWER — CIVIL — No. 46906 — REGISTERED PROFESSIONAL ENGINEER

ISSUED FOR SITE PLAN REVIEW
JANUARY 29, 2021

GRADING & DRAINAGE PLAN

SCALE:	AS NOTED
JOB NO:	21-001
FILE:	21-001-GRADING.dwg
DRAWN:	TJP
CHECKED:	TJP
SHEET NO:	C102

GRADING AND UTILITY LEGEND

- PROPERTY LINE
- PROPERTY SETBACK
- EXISTING BUILDING
- W — W — EXISTING WATER SERVICE
- S — S — EXISTING SEWER SERVICE
- 97 — EXISTING CONTOUR LINE
- PROPOSED BUILDING
- PROPOSED RETAINING WALL
- 100 — PROPOSED CONTOUR MAJOR LINE
- 102 — PROPOSED CONTOUR MINOR LINE
- WD — PROPOSED DOMESTIC WATER
- WF — PROPOSED FIRE PROTECTION
- S — PROPOSED SEWER
- PROPOSED DRAIN LINE
- ETC — PROPOSED ELECTRIC DISTRIBUTION
- G — PROPOSED GAS
- PROPOSED UNDERGROUND CHAMBERS
- PROPOSED DETENTION SYSTEM LIMITS
- PROPOSED LIGHT POLE
- D — PROPOSED DRAIN MANHOLE
- PROPOSED CATCH BASIN
- PROPOSED FLARED END SECTION
- S — PROPOSED SEWER MANHOLE
- PROPOSED CLEAN OUT
- PROPOSED HYDRANT
- PROPOSED VALVE
- T — PROPOSED TRANSFORMER
- × 81.61 — PROPOSED SPOT GRADE
- PROPOSED BUILDING ENTRY POINT

UTILITY NOTES

1. CONTRACTOR TO ADJUST UTILITY ELEMENT MEANT TO BE FLUSH WITH GRADE (CLEAN-OUTS, UTILITY MANHOLES, CATCH BASINS, INLETS, ETC.) THAT IS AFFECTED BY SITE WORK OR GRADE CHANGES, WHETHER SPECIFICALLY NOTED ON PLANS OR NOT.
2. WHERE AN EXISTING UTILITY IS FOUND TO CONFLICT WITH THE PROPOSED WORK, THE LOCATION, ELEVATION, AND SIZE OF THE UTILITY SHALL BE ACCURATELY DETERMINED WITHOUT DELAY BY THE CONTRACTOR, AND THE INFORMATION FURNISHED TO THE ENGINEER FOR RESOLUTION OF THE CONFLICT.
3. THE CONTRACTOR SHALL ALTER THE MASONRY OF THE TOP SECTION OF ALL EXISTING DRAINAGE STRUCTURES AS NECESSARY FOR CHANGES IN GRADE, AND RESET ALL WATER AND DRAINAGE FRAMES, GRATES, AND BOXES TO THE PROPOSED FINISH SURFACE GRADE.
4. THE CONTRACTOR SHALL MAKE ALL ARRANGEMENTS FOR THE ALTERATION AND ADJUSTMENT OF ALL GAS, ELECTRIC, TELEPHONE, AND ANY OTHER PRIVATE UTILITIES BY THE UTILITY COMPANIES.
5. CONTRACTOR SHALL MAINTAIN, OR ADJUST TO NEW FINISH GRADE, AS NECESSARY ALL UTILITY AND SITE STRUCTURES SUCH AS: LIGHT POLES, SIGN POLES, MANHOLES, CATCH BASINS, HAND HOLES, WATER AND GAS GATES, HYDRANTS, ETC., FROM MAINTAINED UTILITY AND SITE SYSTEMS, UNLESS OTHERWISE NOTED OR DIRECTED BY OWNER'S REPRESENTATIVE.
6. ALL SEWER PIPES SHALL BE PVC PER ASTM D3034, SDR-35 AND ASTM D1784 WITH RUBBER GASKET JOINTS.
7. SITE LIGHTING IS SHOWN FOR COORDINATION PURPOSES ONLY. REFER TO ELECTRICAL PLANS FOR EXACT TYPE AND LOCATION.
8. REFER TO ELECTRICAL PLANS FOR SECTIONS AND DETAILS OF THE UTILITY DUCT BANK.
9. AREAS OUTSIDE THE LIMITS OF PROPOSED WORK DISTURBED BY THE CONTRACTOR'S OPERATIONS SHALL BE RESTORED BY THE CONTRACTOR TO THEIR ORIGINAL CONDITION, AT THE CONTRACTOR'S EXPENSE.
10. REFER TO ARCHITECTURAL PLANS FOR PROPOSED LOCATION OF UTILITY SERVICE STUBS AT BUILDING.
11. THE LOCATION, SIZE, DEPTH, AND SPECIFICATIONS FOR CONSTRUCTION OF PRIVATE UTILITY SERVICES SHALL BE INSTALLED ACCORDING TO THE REQUIREMENTS PROVIDED BY, AND APPROVED BY, THE RESPECTIVE UTILITY COMPANY (GAS, TELEPHONE, ELECTRICAL.) FINAL DESIGN AND LOCATIONS AT THE BUILDING WILL BE PROVIDED BY THE ARCHITECT. THE CONTRACTOR SHALL COORDINATE THE INSTALLATION OF THE UTILITY CONNECTIONS WITH THE RESPECTIVE COMPANIES PRIOR TO ANY UTILITY CONSTRUCTION.
12. ALL CEMENT LINED DUCTILE IRON JOINTS AT FITTINGS (CLASS 52.) VALVES, AND HYDRANT LATERALS SHALL BE MECHANICAL JOINT WITH NEOPRENE GASKETS. JOINTS AT OTHER LOCATIONS SHALL BE PUSH-ON TYPE WITH NEOPRENE OR SYNTHETIC RUBBER GASKETS. ALL WATER GATES SHALL OPEN AS PER CITY REQUIREMENTS. ALL WATER LINES SHALL HAVE A MINIMUM OF 5.0 FEET OF GROUND COVER AND A MINIMUM OF 10 FOOT SEPARATION FROM THE SEWER SYSTEM. AT WATER AND SEWER CROSSINGS, THE WATER LINE SHALL BE ENCASED IN SIX INCHES OF CONCRETE FOR A DISTANCE OF 10 FEET ON EITHER SIDE OF THE CROSSING.
13. CONTRACTOR SHALL PROVIDE ALL FITTINGS, BENDS, RESTRAINTS, THRUST BLOCKS, AND OTHER APPURTENANCES NECESSARY FOR INSTALLATION OF WATER SERVICE WHETHER SPECIFICALLY NOTED OR NOT.
14. TAPPING SLEEVES LARGER THAN 6" SHALL BE PROHIBITED. THE CONTRACTOR SHALL PROVIDE CUT IN TEES MEETING ALL REQUIREMENTS FOR THE TOWN OF HOLDEN.
15. THE CONTRACTOR SHALL MAKE NOTE OF ANY AND ALL DEVIATIONS FROM THE PROPOSED SITE PLAN. PROVIDE FIELD LOCATION (SWING TIES, OR COORDINATES) OF ALL INFRASTRUCTURE TO BE INCLUDED ON FINAL AS-BUILT.
16. THE CONTRACTOR SHALL NOTIFY HOLDEN WATER & SEWER AND THE ENGINEER IF ANY UNDOCUMENTED WATER AND SEWER LINES ARE ENCOUNTERED.

HYDRANT LOCATION NOTES

1. FINAL FIRE HYDRANT LOCATIONS SHALL BE AS DIRECTED BY THE HOLDEN FIRE DEPARTMENT AND INCORPORATED INTO AN OVERALL SPRINKLER AND FIRE PROTECTION DESIGN.
2. AT A MINIMUM, HYDRANTS SHALL BE LOCATED WITHIN 100-FEET OF A BUILDING SPRINKLER CONNECTION.

WATER SERVICE NOTES

1. THE DOMESTIC WATER METERS SHALL BE SIZED APPROPRIATELY BY THE PLUMBING ENGINEER FOR THE DEMAND OF THE BUILDING. BACKUP DOCUMENTATION FOR THEIR SIZING SHALL BE PROVIDED TO THE HOLDEN WATER & SEWER DEPARTMENT PRIOR TO ISSUANCE OF A BUILDING PERMIT.
2. BACKFLOW DEVICES SHALL BE PROVIDED AS REQUIRED BY HOLDEN WATER & SEWER. DESIGN INFORMATION ON THE DEVICES SHALL BE PROVIDED TO HOLDEN WATER & SEWER PRIOR TO THE ISSUANCE OF A BUILDING PERMIT.

AS-BUILT NOTES:

1. CONTRACTOR SHALL SUPPLY AS-BUILT PLANS FOR ALL UTILITY CONNECTIONS.
2. CONTRACTOR SHALL NOTIFY THE ENGINEER OF ALL TESTING OF WATER AND SEWER CONNECTIONS AND PROVIDE WRITTEN RESULTS OF TESTING FOR RECORD PURPOSES.

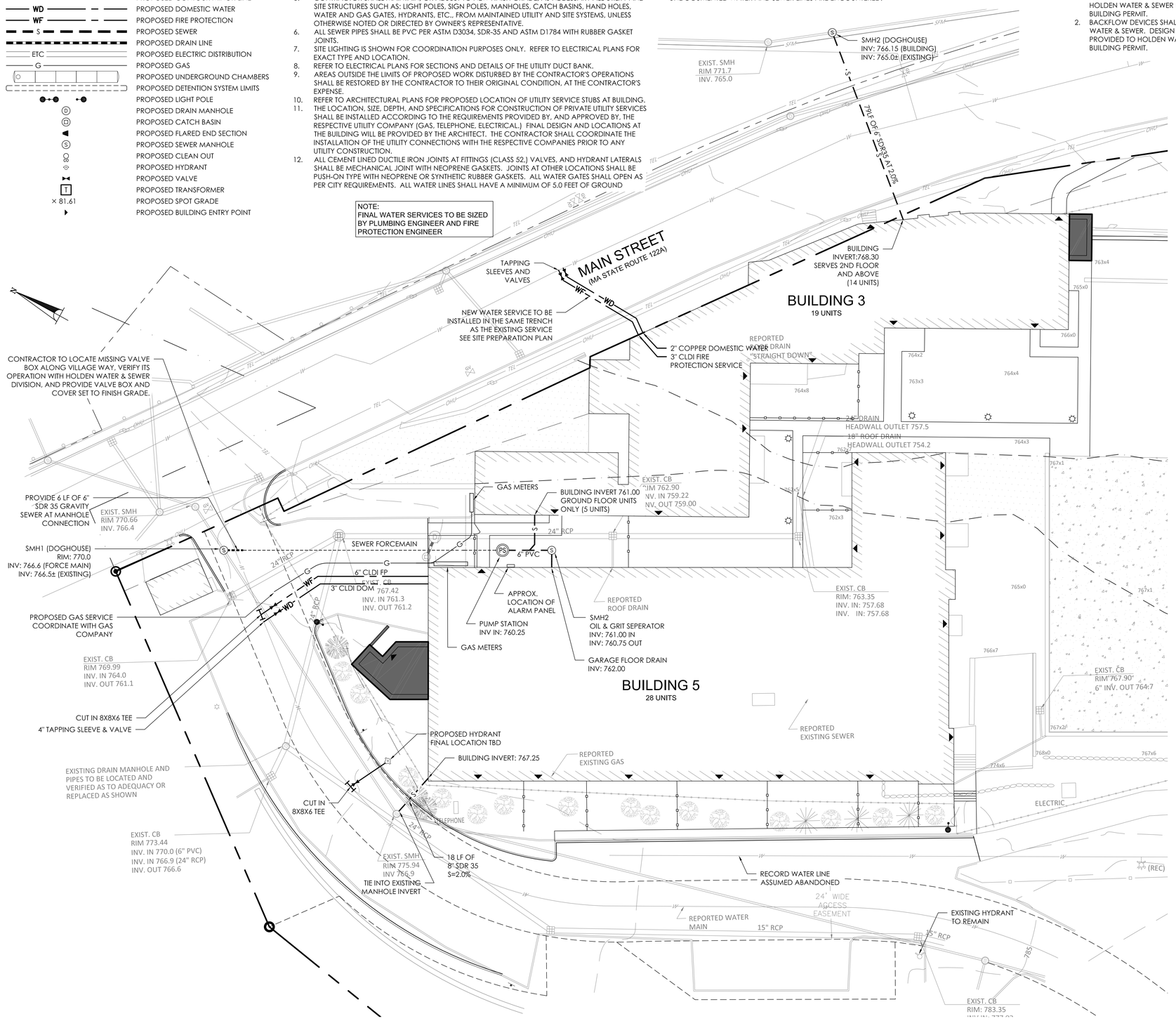

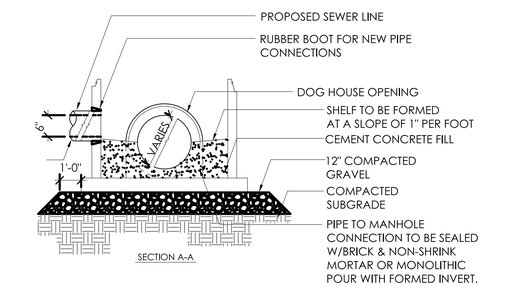

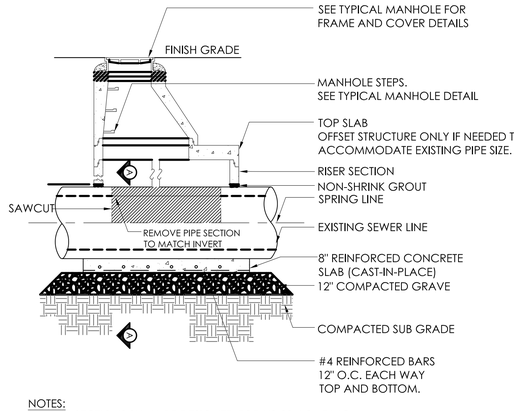

NOTES:
1. ALL SECTIONS SHALL BE DESIGNED FOR HS-20 LOADING.
2. PROVIDE "V" KNOCKOUTS FOR PIPES WITH 1" MAX. CLEARANCE TO OUTSIDE OF PIPE. RUBBER BOOT ALL NEW PIPE CONNECTIONS.
3. BASE SECTION SHALL HAVE AN INSIDE DIMENSION VERIFIED BY THE CONTRACTOR/ MANUFACTURER TO BE CONSTANT WITH THE GEOMETRICS AND SIZES.
4. EXTERIOR OF MANHOLE SHALL BE WATERPROOFED WITH TWO COATS OF BITUMASTIC COATING. WATERPROOFING SHALL EXTEND OVER THE POURED IN PLACE CONCRETE SLAB.

1 DOGHOUSE SEWER MANHOLE
NOT TO SCALE

0' 10' 20' 40'

CONSULTANT:
PVI SITE DESIGN
PVI Site Design, LLC
Civil Engineering • Land Entitlements
Master Planning • Project Management
339-206-1030

PROJECT:
JEFFERSON MILL REDEVELOPMENT
1665 MAIN STREET, HOLDEN, MA

CLIENT / APPLICANT:
NORTH VILLAGE LOFTS, LLC
35 NORWOOD AVE
NEWTON, MA 02459

REV.:	
1: 03-29-2021	DPW AND P.B. COMMENTS
2: 04-16-2021	DPW COMMENTS
3: 05-13-2021	NEW S.P.A. PLANS

SEAL: COMMONWEALTH OF MASSACHUSETTS TIMOTHY J. POWER CIVIL No. 46906 REGISTERED PROFESSIONAL ENGINEER

ISSUED FOR SITE PLAN REVIEW
JANUARY 29, 2021

UTILITY PLAN

SCALE:	AS NOTED
JOB NO:	21-001
FILE:	21-001-UTILITY.dwg
DRAWN:	TJP
CHECKED:	TJP
SHEET NO:	C103

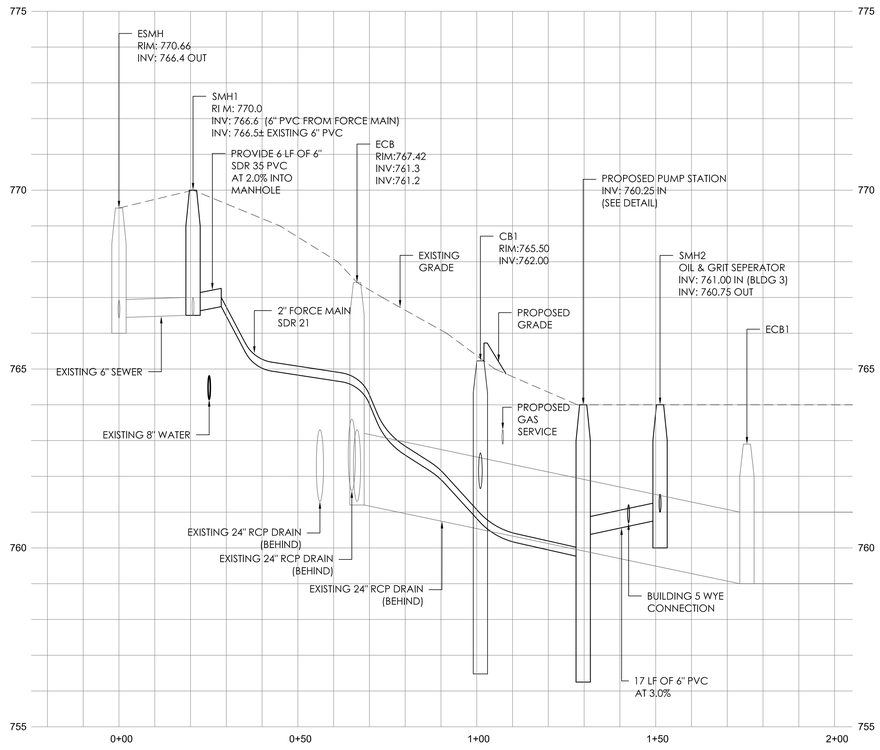

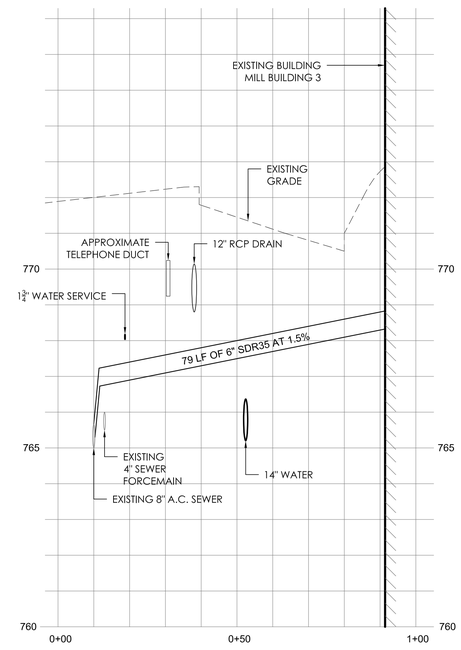

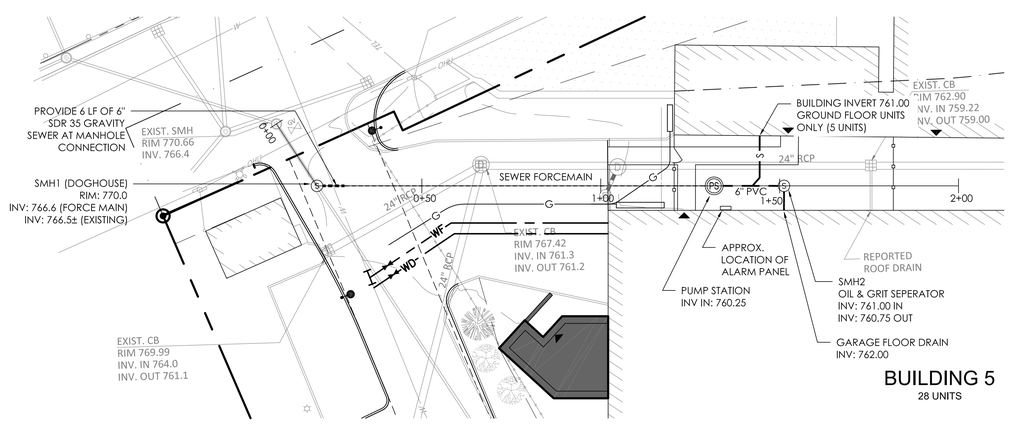

1 PROFILE 1
SCALE: H: 1"=20', V: 1"=2'

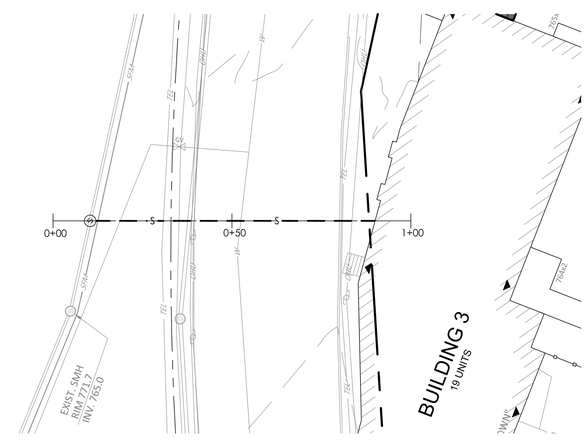

2 PROFILE 2
SCALE: H: 1"=20', V: 1"=2'

0' 10' 20' 40'

CONSULTANT:

PVI SITE DESIGN
PVI Site Design, LLC
Civil Engineering • Land Entitlements
Master Planning • Project Management
339-206-1030

PROJECT:
JEFFERSON MILL REDEVELOPMENT
1665 MAIN STREET, HOLDEN, MA

CLIENT / APPLICANT:
NORTH VILLAGE LOFTS, LLC
35 NORWOOD AVE
NEWTON, MA 02459

REV.:		
1:	03-29-2021	DPW AND P.B. COMMENTS
2:	04-16-2021	DPW COMMENTS
3:	05-13-2021	NEW S.P.A. PLANS

SEAL:
COMMONWEALTH OF MASSACHUSETTS
TIMOTHY J. POWER
CIVIL
No. 46906
REGISTERED PROFESSIONAL ENGINEER

ISSUED FOR SITE PLAN REVIEW
JANUARY 29, 2021

SEWER PROFILES

SCALE:	AS NOTED
JOB NO:	21-001
FILE:	21-001-UTILITY.dwg
DRAWN:	TJP
CHECKED:	TJP
SHEET NO:	C104

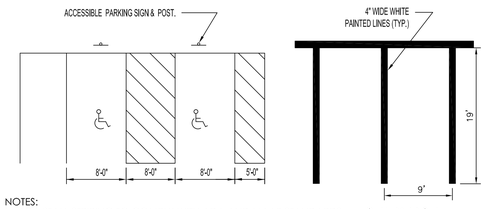

NOTES:
1. ADA STALL STRIPING TO COMPLY WITH ADA AND MAAB STANDARDS
2. STALLS SHOWN ARE TYPICAL. REFER TO SITE PLAN FOR ACTUAL LAYOUT.

1 TYPICAL PARKING STRIPING
NOT TO SCALE

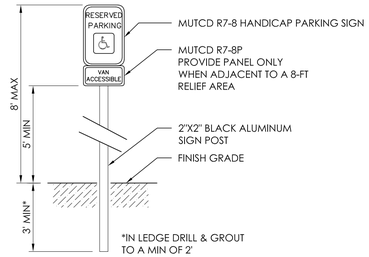

NOTE:
1. TOP OF ALL PARKING SIGNS SHALL BE THE SAME HEIGHT ABOVE FINISH GRADE
2. SIGN SHALL BE INSTALLED BETWEEN 3' AND 10' FROM FACE OF CURB / END OF PARKING SPACE.
3. WHEN INSTALLED LESS THAN 3' FROM END OF SPACE, PROVIDE 4" BOLLARD TO 4' ABOVE FINISH GRADE, PAINTED BLACK.

2 ADA PARKING SIGN
NOT TO SCALE

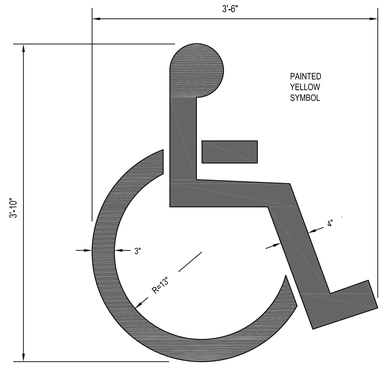

3 ADA PARKING SYMBOL
NOT TO SCALE

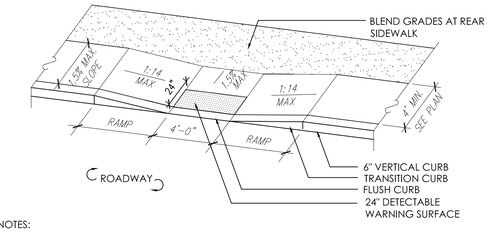

NOTES:
1. RAMP CROSS SECTION TO BE THE SAME AS ADJACENT SIDEWALK; I.E. DEPTH OF SURFACE AND FOUNDATION.
2. DIMENSIONS ARE SUBJECT TO CHANGE IN FIELD. ALL SLOPES AND DIMENSIONS TO COMPLY WITH A.D.A. AND MAAB REQUIREMENTS.
3. PROVIDE EXPANSION JOINT AT TOPS OF RAMP AND AT BACK OF WALK AT INTERFACE OF CURB.
4. PROVIDE HEAVY BROOM FINISH ON RAMP AND SIDE SLOPES PERPENDICULAR TO FLOW OF TRAFFIC.
5. MINIMUM WALK DIMENSIONS ARE FROM BACK OF CURB.
6. TRANSITION CURB LENGTH AS REQUIRED TO MEET CODE.
7. FIXED OBJECTS (i.e. UTILITY POLES, HYDRANTS ETC.) MUST NOT ENCROACH ON ANY PART OF A WHEELCHAIR RAMP, INCLUDING TRANSITION SLOPES.
8. AT NO TIME IS ANY PART OF THE WHEELCHAIR RAMP, EXCLUDING CURB TRANSITIONS, TO BE LOCATED OUTSIDE OF THE CROSSWALK.

4 ADA CURB CUT
NOT TO SCALE

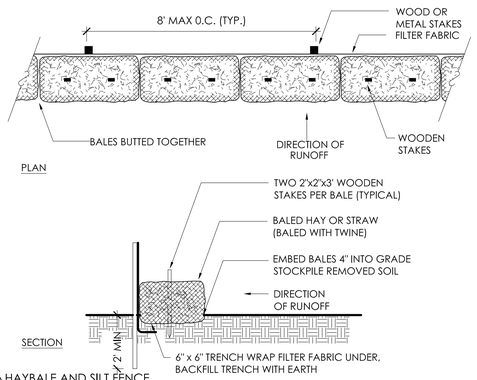

5 HAYBALE AND SILT FENCE
NOT TO SCALE

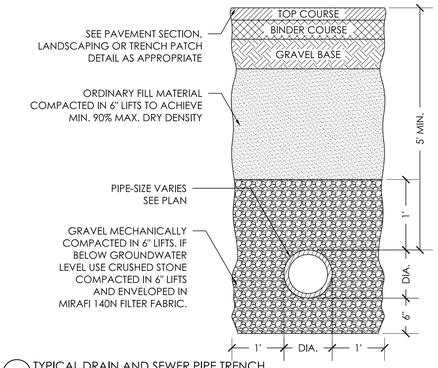

6 TYPICAL DRAIN AND SEWER PIPE TRENCH
NOT TO SCALE

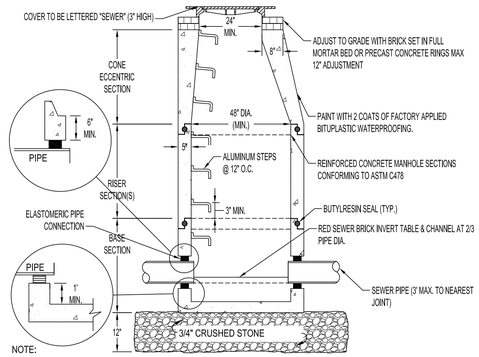

NOTE:
THE MANHOLE, INCLUDING ALL COMPONENT PARTS, SHALL HAVE ADEQUATE SPACE, STRENGTH AND LEAK PROOF QUALITIES CONSIDERED NECESSARY FOR THE INTENDED SERVICE. SPACE REQUIREMENT AND CONFIGURATIONS SHALL BE AS SHOWN ON THE DRAWING. THE COMPLETE STRUCTURE SHALL BE OF SUCH MATERIAL AND QUALITY AS TO WITHSTAND (H-20 LOADING) OR WITHOUT FAILURE AND PREVENT LEAKAGE IN EXCESS OF ONE GALLON PER DAY PER VERTICAL FOOT OF MANHOLE.

7 TYPICAL SEWER MANHOLE
NOT TO SCALE

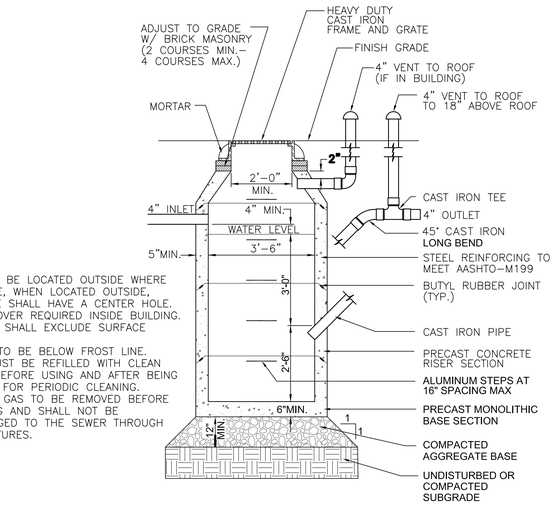

NOTES:
1. TRAP TO BE LOCATED OUTSIDE WHERE POSSIBLE, WHEN LOCATED OUTSIDE, MANHOLE SHALL HAVE A CENTER HOLE.
2. TIGHT COVER REQUIRED INSIDE BUILDING.
3. GRADING SHALL EXCLUDE SURFACE WATER.
4. OUTLET TO BE BELOW FROST LINE.
5. TRAP MUST BE REFILLED WITH CLEAN WATER BEFORE USING AND AFTER BEING EMPTIED FOR PERIODIC CLEANING.
6. OIL AND GAS TO BE REMOVED BEFORE CLEANING AND SHALL NOT BE DISCHARGED TO THE SEWER THROUGH ANY FIXTURES.

12 OIL AND GRIT SEPARATOR
NOT TO SCALE

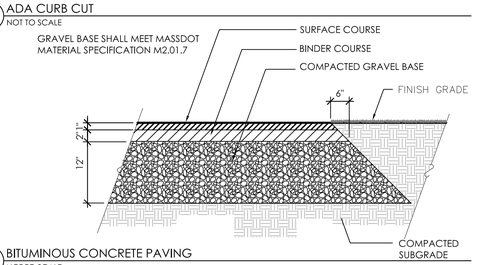

8 BITUMINOUS CONCRETE PAVING
NOT TO SCALE

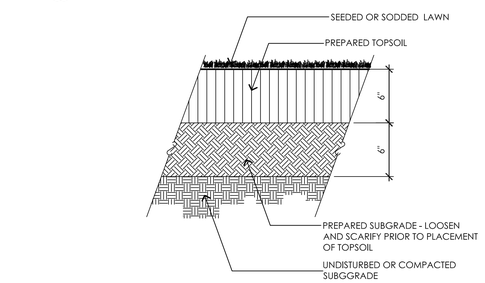

9 TYPICAL LOAM AND SEED
NOT TO SCALE

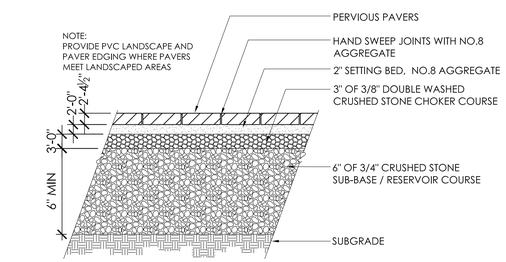

10 TYPICAL POROUS PAVERS

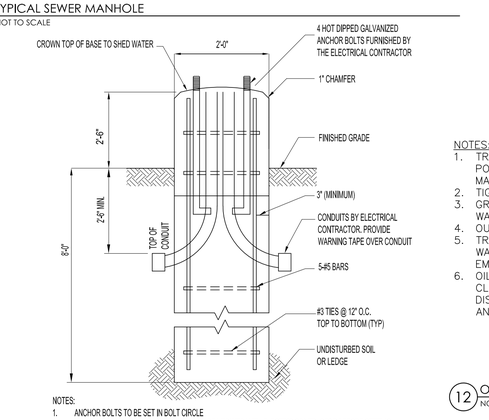

NOTES:
1. ANCHOR BOLTS TO BE SET IN BOLT CIRCLE
2. EXACT SIZE AND LOCATION OF BOLTS MUST BE VERIFIED WITH ELECTRIC CONTRACTOR BEFORE SETTING.
3. GROUNDING PER LIGHTING PLANS.
4. CONTRACTOR TO PROVIDE LIGHT POLE BASE SHOP DRAWING STAMPED BY A STRUCTURAL ENGINEER PRIOR TO INSTALLATION

11 TYPICAL LIGHT POLE BASE
NOT TO SCALE

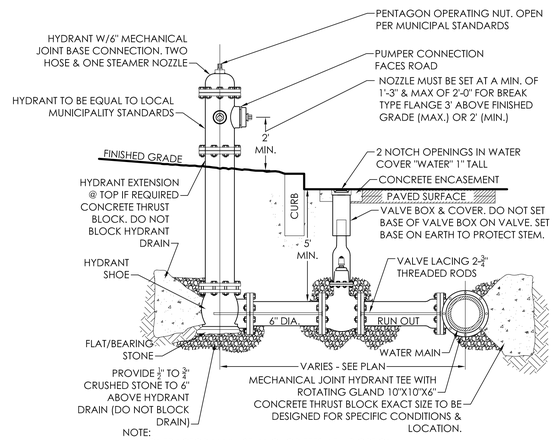

NOTE:
1.) CONTRACTOR MAY USE ANCHOR TEES AT HIS OPTION.
2.) HYDRANTS AND VALVES TO OPERATE PER MUNICIPAL STANDARDS

13 TYPICAL HYDRANT
NOT TO SCALE

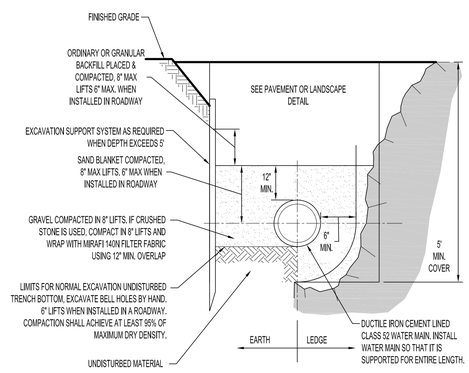

14 DUCTILE IRON PIPE / WATER SERVICE TRENCH
NOT TO SCALE

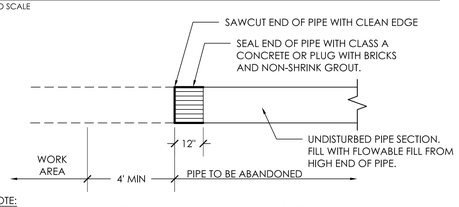

NOTE:
PROVIDE SUITABLE PLUG BASED ON PIPE MATERIAL. FOR CONCRETE PIPE OR ASBESTOS CONCRETE (AC), PLUG AS SHOWN IN THE DETAIL.
FOR CLDI OR CAST IRON PIPE, PROVIDE BOLTED CAP OF MATCHING MATERIAL.
FOR PVC PROVIDE WATERTIGHT PLUG
IF A SUITABLE WATERTIGHT PLUG CANNOT BE ACHIEVED, THE PIPE SHALL BE REMOVED.

15 PIPE ABANDONMENT DETAIL
NOT TO SCALE

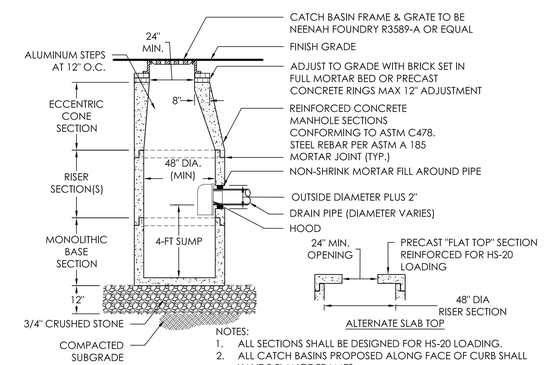

NOTES:
1. ALL SECTIONS SHALL BE DESIGNED FOR HS-20 LOADING.
2. ALL CATCH BASINS PROPOSED ALONG FACE OF CURB SHALL HAVE 3 FLANGE FRAMES.
3. ALL DOUBLE CATCH BASINS DENOTED ON THE PLAN SHALL BE 5' DIAMETER STRUCTURES

16 TYPICAL CATCH BASIN
NOT TO SCALE

CONSULTANT:
PVI SITE DESIGN
PVI Site Design, LLC
Civil Engineering - Land Entitlements
Master Planning - Project Management
339-206-1030

PROJECT:
JEFFERSON MILL REDEVELOPMENT
1665 MAIN STREET, HOLDEN, MA

CLIENT / APPLICANT:
NORTH VILLAGE LOFTS, LLC
35 NORWOOD AVE
NEWTON, MA 02459

REV.:		
1:	03-29-2021	DPW AND P.B. COMMENTS
2:	04-16-2021	DPW COMMENTS
3:	05-13-2021	NEW S.P.A. PLANS

SEAL: COMMONWEALTH OF MASSACHUSETTS TIMOTHY J. POWER CIVIL No. 46908 REGISTERED PROFESSIONAL ENGINEER

ISSUED FOR SITE PLAN REVIEW
JANUARY 29, 2021

DETAILS 1

SCALE:	AS NOTED
JOB NO:	21–001
FILE:	21–001–DETAILS.dwg
DRAWN:	TJP
CHECKED:	TJP

SHEET NO:
C201

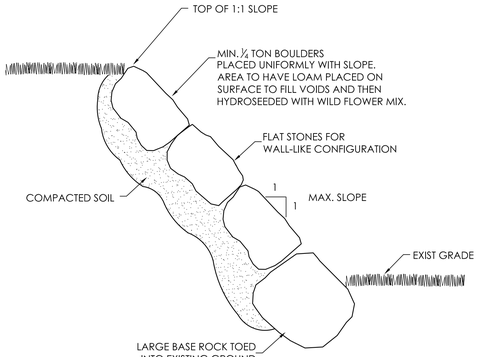

1 BANK STABILIZATION
NOT TO SCALE

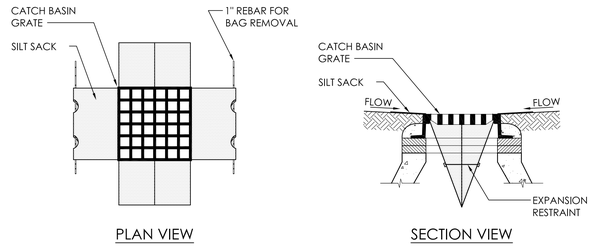

CONSTRUCTION NOTES

1. INSTALL SILT SACKS IN ALL CATCH BASINS WHERE INDICATED ON THE SITE PLANS BEFORE COMMENCING WORK OR IN PAVED AREAS AFTER THE BINDER COURSE IS PLACED AND EROSION CONTROL BARRIERS HAVE BEEN REMOVED.
2. GRATE TO BE PLACED OVER SILT SACK.
3. SILT SACKS SHALL BE INSPECTED PERIODICALLY AND AFTER ALL STORM EVENTS. CLEANING OR REPLACEMENT SHALL BE PERFORMED AS NEEDED. MAINTAIN SILT SACKS UNTIL UPSTREAM AREAS HAVE BEEN PERMANENTLY STABILIZED.

2 SILT SACK
NOT TO SCALE

########### DESIGN NOTES
######### RATED TREATMENT CAPACITY IS 1.4 CFS, OR PER LOCAL REGULATIONS.
THE STANDARD ######### CONFIGURATION IS SHOWN. ALTERNATE CONFIGURATIONS ARE AVAILABLE AND ARE LISTED BELOW. SOME CONFIGURATIONS MAY BE COMBINED TO SUIT SITE REQUIREMENTS.
CONFIGURATION DESCRIPTION
GRATED INLET ONLY (NO INLET PIPE)
GRATED INLET WITH INLET PIPE OR PIPES
CURB INLET ONLY (NO INLET PIPE)
CURB INLET WITH INLET PIPE OR PIPES

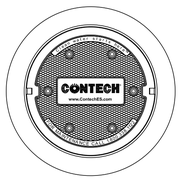

FRAME AND COVER
(DIAMETER VARIES)
N.T.S.

GENERAL NOTES
1. CONTECH TO PROVIDE ALL MATERIALS UNLESS NOTED OTHERWISE.
2. DIMENSIONS MARKED WITH ( ) ARE REFERENCE DIMENSIONS. ACTUAL DIMENSIONS MAY VARY.
3. FOR FABRICATION DRAWINGS WITH DETAILED STRUCTURE DIMENSIONS AND WEIGHTS, PLEASE CONTACT YOUR CONTECH ENGINEERED SOLUTIONS LLC REPRESENTATIVE. www.ContechES.com
4. CDS WATER QUALITY STRUCTURE SHALL BE IN ACCORDANCE WITH ALL DESIGN DATA AND INFORMATION CONTAINED IN THIS DRAWING.
5. STRUCTURE SHALL MEET AASHTO HS20 AND CASTINGS SHALL MEET HS20 (AASHTO M 306) LOAD RATING. ASSUMING GROUNDWATER ELEVATION AT, OR BELOW, THE OUTLET PIPE INVERT ELEVATION. ENGINEER OF RECORD TO CONFIRM ACTUAL GROUNDWATER ELEVATION.
6. PVC HYDRAULIC SHEAR PLATE IS PLACED ON SHELF AT BOTTOM OF SCREEN CYLINDER. REMOVE AND REPLACE AS NECESSARY DURING MAINTENANCE CLEANING.

INSTALLATION NOTES
A. ANY SUB-BASE, BACKFILL DEPTH, AND/OR ANTI-FLOTATION PROVISIONS ARE SITE-SPECIFIC DESIGN CONSIDERATIONS AND SHALL BE SPECIFIED BY ENGINEER OF RECORD.
B. CONTRACTOR TO PROVIDE EQUIPMENT WITH SUFFICIENT LIFTING AND REACH CAPACITY TO LIFT AND SET THE CDS MANHOLE STRUCTURE (LIFTING CLUTCHES PROVIDED).
C. CONTRACTOR TO ADD JOINT SEALANT BETWEEN ALL STRUCTURE SECTIONS, AND ASSEMBLE STRUCTURE.
D. CONTRACTOR TO PROVIDE, INSTALL, AND GROUT PIPES. MATCH PIPE INVERTS WITH ELEVATIONS SHOWN.
E. CONTRACTOR TO TAKE APPROPRIATE MEASURES TO ASSURE UNIT IS WATER TIGHT, HOLDING WATER TO FLOWLINE INVERT MINIMUM. IT IS SUGGESTED THAT ALL JOINTS BELOW PIPE INVERTS ARE GROUTED.

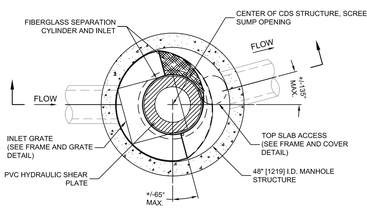

PLAN VIEW B-B
N.T.S.

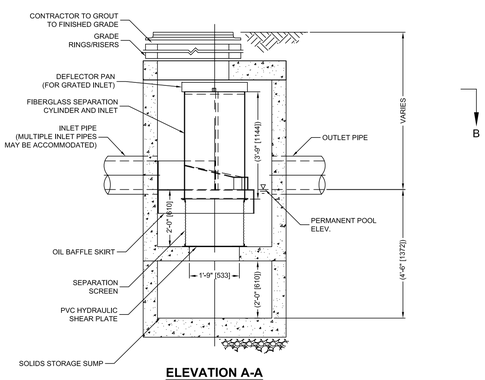

ELEVATION A-A
N.T.S.

9025 Centre Pointe Dr., Suite 400, West Chester, OH 45069
800-338-1122 513-645-7000 513-645-7993 FAX

4 WATER QUALITY UNIT - CDS1515-4
NOT TO SCALE

NOTES:

1. THIS DETAIL IS PROVIDED TO ILLUSTRATE THE GENERAL ARRANGEMENT OF A SEGMENTAL BLOCK RETAINING WALL STRUCTURE. THIS DRAWING MUST BE USED IN CONJUNCTION WITH THE RELATED DETAIL DRAWINGS AND SPECIFICATIONS FOR PROPER DESIGN AND CONSTRUCTION, AS PREPARED BY A MASSACHUSETTS REGISTERED STRUCTURAL ENGINEER AS SUBMITTED BY THE CONTRACTOR.
2. STRUCTURES SUCH AS HANDRAILS, GUARDRAILS, FENCES, TERRACES, AND SITE CONDITIONS SUCH AS WATER APPLICATIONS, DRAINAGE AND SOIL CONDITIONS, ADDITIONAL LIVE AND DEAD LOADS, ETC., HAVE SIGNIFICANT EFFECTS ON THE WALL DESIGN. CONTRACTOR SHALL SUBMIT SHOP DRAWINGS FOR SUCH SPECIFIC CONDITIONS AS PER NOTE 1.
3. DISTANCE BETWEEN GEOGRID LAYERS,THICKNESS OF WASHED STONE, DRAINAGE LAYER, SIZE OF COMPACTED GRAVEL BASE SHALL BE DETERMINED BY FINAL DESIGN OF WALLS AS PER NOTE 1.

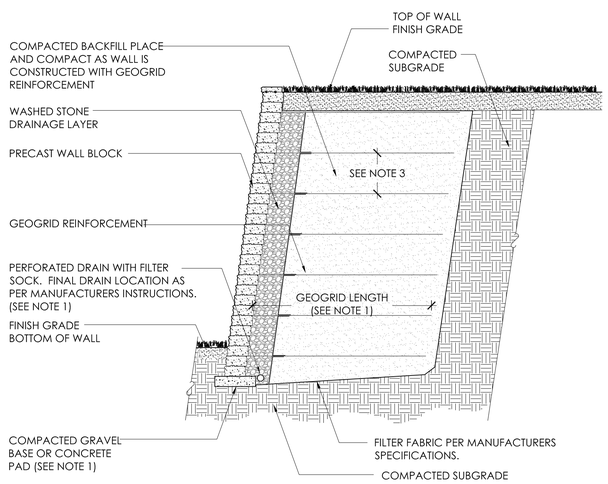

3 TYPICAL SEGMENTAL BLOCK WALL
NOT TO SCALE

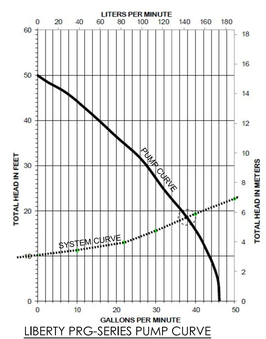

LIBERTY PRG-SERIES PUMP CURVE

5 SEWER PUMP STATION
NOT TO SCALE

TOWN OF HOLDEN WATER & SEWER SPECIFICATIONS

HOLDEN WATER MAIN SPECIFICATIONS:
WATER MAINS SHALL BE DUCTILE IRON PIPE TO BE A MINIMUM OF 8 INCHES IN DIAMETER.

WATER MAINS SHALL BE LAID TO PROVIDE A MINIMUM COVER OF FIVE (5) FEET FROM THE FINISHED GRADE, AND SHALL NOT BE DEEPER THAN EIGHT (8) FEET. ALL PIPING SHALL BE CLASS 52 DUCTILE-IRON PIPE DESIGNED FOR ON INTERNAL WORKING PRESSURE. ALL FITTINGS AND HYDRANTS SHALL HAVE PROPERLY DESIGNED CONCRETE THRUST BLOCKS INSTALLED BEHIND THEM.

GATE VALVES SHALL BE INSTALLED ON EACH OUTLET OF ALL TEES AND CROSSES, EVERY 500 FEET OF MAIN, ON HYDRANT BRANCHES, AND AT DEAD ENDS. GATE VALVES SHALL BE RESILIENT WEDGE, OPEN LEFT MEETING ALL AWWA STANDARDS.

HYDRANTS SHALL BE LOCATED EVERY 500 FEET ON ONE SIDE OF EACH STREET UNLESS A GREATER DISTANCE IS APPROVED, AND SHALL HAVE A ONE (1) INCH WASHED STONE DRAINAGE SUMP ONE-HALF (1/2) CUBIC YARD IN VOLUME AT ITS BASE.

GATE VALVES, ROAD BOXES AND HYDRANTS SHALL BE EQUAL IN QUALITY TO THOSE PRESENTLY BEING PURCHASED BY THE TOWN'S WATER DEPARTMENT.

WATER SERVICE SHALL BE MINIMUM 1" COPPER TYPE K AT A BURIAL DEPTH OF SIX (6) FEET. CLEAN SAND SHALL FULLY ENCOMPASS THE COPPER TUBING (12" ALL SIDES).

UPON COMPLETION OF THE WATER MAIN CONSTRUCTION AND PRIOR TO PUTTING INTO SERVICE A PRESSURE AND LEAKAGE TEST WILL BE MODE. ANY DEFECTS FOUND SHALL BE CORRECTED IMMEDIATELY. ONCE A SUCCESSFUL TEST HAS BEEN RUN, THE LINES SHALL BE CHLORINATED BEFORE THEY ARE PUT INTO SERVICE. THE DEVELOPER SHALL BE RESPONSIBLE FOR PROVIDING ALL NECESSARY EQUIPMENT AND LABOR TO CONDUCT THE TESTS AND CHLORINATION WHICH MUST BE WITNESSED BY A REPRESENTATIVE OF THE DEPARTMENT OF PUBLIC WORKS.

PRIOR TO THE CONSTRUCTION OF BUILDINGS IN A SUBDIVISION, OR IN ANY PHASE OF A SUBDIVISION APPROVED BY THE PLANNING BOARD, THE WATER SUPPLY AND HYDRANTS FOR FIRE PROTECTION SHALL BE INSTALLED AND MAINTAINED BY THE APPLICANT IN A MANNER ACCEPTABLE TO THE FIRE CHIEF AND THE DEPARTMENT OF PUBLIC WORKS UNTIL ACCEPTANCE OF THE WATER LINES BY THE TOWN OF HOLDEN

TOWN OF HOLDEN LIST OF APPROVED MATERIALS FOR WATER SYSTEM INFRASTRUCTURE JANUARY 2006:

CASTINGS: ALL CASTINGS AND FITTINGS SHALL BE MANUFACTURED IN NORTH AMERICAN AS REQUIRED BY HOLDEN DPW.

WATER MAINS: SHALL BE DUCTILE IRON CENTRIFUGALLY CAST WITH PUSH-ON JOINTS CONFORMING TO AWWA/ANSI C151. PIPE SHALL BE CLASS 52. DOUBLE CEMENT LINED AND BITUMINOUS COATED CONFORMING TO AWWA/ANSI C104. NO MANUFACTURER SPECIFIED.

GATE VALVE: (12-INCH DIAMETER OR LESS): SHALL BE 200 PSI WORKING PRESSURE. NON-RISING STEM, "O" RING, OPEN LEFT. MECHANICAL JOINT, TWO-INCH DUCTILE IRON OPERATING NUT WITH STAINLESS STEEL BOLT, RESILIENT SEATED (RESILIENT WEDGE) GATE VALVE CONFORMING TO ANSI/AWWA C509 - KENNEDY, CLOW OR MUELLER. VALVES SHALL BE EPOXY COATED AND SUPPLIED WITH MECHANICAL JOINT ACCESSORIES, HIGH STRENGTH ALLOY STEEL BOLTS AND HEAVY HEXAGON NUTS CONFORMING TO ANSI/AWWA C111.

GATE VALVE BOXES: SHALL BE CAST IRON, TWO PIECE, SLIDING TYPE WITH A NON-FLANGE TOP SECTION. NO INSIDE STOPS, AND AN OUTSIDE SHAFT DIAMETER OF SIX INCHES. BOTTOM SECTION SHALL BE BELLED BASE. LENGTH OF TOP SECTION SHALL BE MINIMUM OF 24 INCHES. MIDDLE AND BOTTOM SECTION LENGTH AS NEEDED. BOXES SHALL HAVE THE WORD "WATER" CAST INTO COVER. NO MANUFACTURER SPECIFIED.

DUCTILE IRON FITTINGS: PIPE FITTINGS SHALL HAVE MECHANICAL JOINT ENDS CONFORMING TO ANSI/AWWA C1/A21.11, DOUBLE CEMENT LINING AND BITUMINOUS COATING CONFORMING TO ANSI/AWWA C104.A21.4. FITTINGS SHALL BE SUPPLIED WITH MECHANICAL JOINT ACCESSORIES UNLESS SPECIFIED OTHERS. WITH HIGH STRENGTH LOW ALLOY STEEL BOLTS AND HEAVY HEXAGON NUTS CONFORMING TO ANSI/AWWA C111.A21.11. LONG BODY FITTINGS SHALL BE CLASS 350 DUCTILE IRON CONFORMING TO ANSI/AWWA C110/A21.10. COMPACT BODY FITTINGS SHALL BE CLASS 350 DUCTILE IRON CONFORMING TO ANSI/AWWA C153/A21.53.

HYDRANTS: ALL HYDRANTS MUST BE EDDY MODEL F-2640. OPEN LEFT, WITH BREAK FLANGE. HYDRANTS ARE TO BE FACTORY PAINTED YELLOW WITH REFLECTIVE WHITE ON BONNET AND COPS WITH OIL BASED PAINT.

SERVICE LINE FROM MAIN TO CURB: TYPE K COPPER (ASTM B88). MINIMUM SIZE 1".

SERVICE LINE FROM CURB TO HOUSE: TYPE K COPPER (ASTM B88) OR PLASTIC WITH MINIMUM PRESSURE RATING OF 200 PSI.

CORPORATION: BALL VALVE TYPE CONSTRUCTION WITH INLET CC THREAD AND COMPRESSION POCK JOINT ON THE OUTLET. HEAVY PATTERNS, AND CONFORMING TO AWWA/ANSI C800 - MCDONALD, FORD OR APPROVED EQUAL. INLET IRON PIPE THREADS ORE REQUIRED FOR 1-1/2" AND LARGER CORPORATIONS. BRASS SHALL HAVE MINIMUM LEAD CONTENT; TOWN MAY REQUEST LEAD CONTENT OF ANY BRASS OR COPPER MATERIALS.

CURB STOP: MCDONALD BALL VALVE TYPE CONSTRUCTION WITH INLET COMPRESSION AND COMPRESSION PACK JOINT ON THE OUTLET. HEAVY PATTERNS, AND CONFORMING TO AWWA/ANSI C800 - BRASS SHALL HAVE MINIMUM LEAD CONTENT; TOWN MAY REQUEST LEAD CONTENT OF ANY BRASS OR COPPER MATERIALS.

CURB BOX: SHALL BE ERIE STYLE WITH ARCH PATTERN, ONE-INCH IN DIAMETER, CONSTRUCTED FROM SCH40 BLOCK STEEL. ADJUSTABLE IN LENGTH FROM FIVE FEET TO SIX FEET, AND HAVE 5/8-DIAMETER STAINLESS STEEL ROD 36-INCHES IN LENGTH WITH HEAVY BRASS PINS.
ONE-INCH CAPS SHALL BE EXTRA HEAVY WITH BRASS PENTAGON PLUG AND COARSE "ROPE" THREAD TO FIT A ONE-INCH ERIE STYLE BOX.
TWO-INCH CAPS SHALL BE A #3 COVER, CAST IRON WITH BRASS BUSHING AND BRAS PENTAGON PLUG TO FIT A TWO-INCH ERIE STYLE BOX.
ALL CAPS SHALL BE CONSTRUCTED OF MAGNETIC MATERIAL AND HAVE THE WORD "WATER" CAST INTO COVER - MADE IN NORTH AMERICA.

METERS: BADGER METER WITH LTRON ERT PURCHASED THROUGH THE TOWN AND INSTALLED BY THE TOWN FOR STANDARD (5/8") SIZE.

NON-STANDARD LARGER METERS INSTALLED BY CONTRACTOR.

METER SETTERS: METER SETTERS SHALL HAVE COMPRESSION PACK JOINT CONNECTIONS ON THE INLET AND OUTLET ENDS SUITABLE FOR 3/4-INCH COPPER TUBING. METER SETTERS FOR ONE-INCH METERS SHALL HAVE FEMALE IRON PIPE THREAD CONNECTIONS ON THE INLET AND OUTLET ENDS. TWO METER GASKETS SHALL BE SUPPLIED WITH EACH HORN - NO MANUFACTURER SPECIFIED.

HOLDEN SEWERAGE SPECIFICATIONS:

SEWER PIPES AND RELATED EQUIPMENT, SUCH AS MANHOLES AND CONNECTING Y'S SHALL BE CONSTRUCTED IN CONFORMITY WITH THE SPECIFICATIONS OF THE TOWN OF HOLDEN PUBLIC WORKS DEPARTMENT.

THE INSTALLATION OF WATER AND SEWER PIPES AND RELATED EQUIPMENT SHALL NOT BE BACKFILLED UNTIL INSPECTED BY THE PROPER AUTHORITY.

SEWER MAINS SHALL BE MINIMUM 8" SDR 35 PVC LAID TO A MINIMUM SLOPE OF ONE-HALF (1/2) FOOT PER 100 FEET. ALL SEWER LATERALS SHALL BE 6" SDR 35 PVC LAID AT A MINIMUM PITCH OF ONE-QUARTER (1 /4) INCH PER FOOT. ALL SEWERS, INCLUDING HOUSE SERVICES, SHALL BE LAID IN ON ENVELOPE OF THREE-QUARTER (3/4) INCH WASHED GRAVEL. DEFLECTIONS IN LINE OR GRADE IN EXCESS OF ONE-HALF (1/2) INCH WILL BE CAUSE FOR REJECTION.

LINE AND GRADE SHALL BE CONTROLLED BY THE USE OF LASER INSTRUMENTS.

ALL CASTINGS AND FITTING SHALL BE MANUFACTURED IN NORTH AMERICA.

ALL SEWER MANHOLES SHALL BE VACUUM TESTED IN ACCORDANCE WITH ASTM C1244.

EXFILTRATION/INFILTRATION. AIR TESTS AND TV INSPECTION
TIME FOR MAKING TESTS: AFTER THE PIPE HAS BEEN LAID AND BACKFILLED, AN INFILTRATION, EXFILTRATION OR LOW PRESSURE AIR TEST SHALL BE MADE ON EACH SECTION OF PIPELINE BETWEEN MANHOLES. WHEN NO GROUNDWATER EXISTS AT THE TIME OF THE TEST, THE PIPELINE SHALL BE SUBJECTED TO AN EXFILTRATION TEST OR AN AIR TEST. TESTING SHALL BE COMPLETED BASED UPON DEP REQUIREMENTS BELOW.

TV INSPECTION: WHEN THE PIPE LINES PASS AN EXFILTRATION/INFILTRATION OR AIR TEST, THEY SHALL BE SUBJECT TO A TV INSPECTION PERFORMED UNDER THE SUPERVISION OF THE ENGINEER. A RECORDING OF THE TV INSPECTION SHALL BE PROVIDED TO THE TOWN ENGINEER. ANY SECTIONS FOUND TO BE DAMAGED OR BLOCKED SHALL BE REPAIRED TO THE SATISFACTION OF THE TOWN ENGINEER OR RETESTED

MINIMUM STANDARDS FOR WATERTIGHT CONSTRUCTION FOR SEWER PIPING

ALLOWABLE INFILTRATION OR EXFILTRATION SHOULD NOT EXCEED 100 GPD/INCH-DIAM/MILE OF SEWER. LEAKAGE TEST SHALL BE SPECIFIED IN THE SPECIFICATION AND MAY INCLUDE WATER OR LOW PRESSURE AIR TESTING.
WATERTIGHT CONSTRUCTION CONSISTS OF THE USE OF DUCTILE IRON, MECHANICAL JOINT PIPE. PRESTRESSED CONCRETE CYLINDER PIPE, AND SOLVENT WELDED JOINT PVC PIPE AND ANY COMBINATION OF THE ABOVE.
PRESSURE TESTING SHOULD BE PERFORMED BY THE OWNER AFTER COMPLETION OF CONSTRUCTION. PRIOR TO STARTUP AND AFTER ON YEAR OF NATURAL SETTLING IN ORDER TO ENSURE THE WATERTIGHTNESS OF THE AFFECTED COLLECTION SYSTEMS, MANHOLES AND PUMP STATION WET WELLS.

ACCEPTABLE AIR TESTING PROCEDURES ARE PRESENTED IN AMERICAN SOCIETY OF TESTING AND MATERIAL STANDARD C828-90T "STANDARD TEST METHOD FOR LOW-PRESSURE AIR TEST OF VITRIFIED CLAY PIPE", IN LIEU OF THAT STANDARD THE FOLLOWING TEST PROCEDURE IS ACCEPTABLE:
PLUG ALL OPENINGS IN THE SECTION OF SEWER PIPING TO BE TESTED
PRESSURIZE THE SYSTEM TO BE TESTED TO AN AIR PRESSURE OF 5 PSIG. SHUT OFF THE PRESSURIZED AIR SOURCE.
ALLOW THE PRESSURE TO STABILIZE FOR A MINIMUM OF 5 MINUTES
RECORD THE STABILIZED PRESSURE IN THE TEST SECTION. RECORD THE TEST START TIME. THE MINIMUM TEST PRESSURE IS 4 PSIG. THE MINIMUM TEST TIME IS 5 MINUTES. AT THE END OF THE PRESSURE TESTING TIME PERIOD RECORD THE TEST PRESSURE AND THE TEST TERMINATION TIME. IF THE PRESSURE DROP IS GREATER THAN 2 PSIG DURING THE DURATION OF THE TEST, THE TESTED SECTION HAS FAILED THE TEST.
IF THE TESTS ARE FAILED, REPAIRS MUST BE MADE TO THE AFFECTED SEWER PIPE AND RESTESTED.

INSPECTIONS WILL ONLY BE MADE DURING THE HOURS OF 8:00 AM TO 4:00 PM MONDAYS THROUGHT THURSDAYS AND 8:00 AM TO NOON ON FRIDAYS EXCEPT HOLIDAYS. PLEASE NOTE: A MINIMUM TWO (2) HOUR NOTIFICATION SHALL BE GIVEN BY THE CONTRACTOR FOR REQUESTED INSPECTIONS.

THE FOLLOWING IS A LIST OF REQUIREMENTS FOR HOUSE CONNECTIONS TO THE SANITARY SEWER LINES:

1. A VALID PERMIT MUST BE ISSUED PRIOR TO THE START OF WORK TO INSTALL A PARTICULAR SEWER CONNECTION. LACK OF AN APPROVED PERMIT MAY RESULT IN SUSPENSION OR REVOCATION OF YOUR DRAINLAYERS LICENSE.

2. PROPER NOTIFICATION TO ALL REQUIRED AGENCIES MUST BE MADE WITHIN REQUIRED TIME PERIODS. NOTIFICATION TO DIG-SAFE (888-344-7233) MUST BE MADE 72 HOURS PRIOR TO THE START OF WORK. THE HOLDEN WATER DEPORTMENT (508-210-5550) MUST BE NOTIFIED 48 HOURS PRIOR TO THE START OF WORK FOR INFORMATION AND LOCATION MARKING OF WATER LINES.

3. THE CONTRACTOR IS RESPONSIBLE TO COMPLY WITH ALL APPLICABLE OSHA OPEN TRENCH SAFETY REQUIREMENTS. IT IS NOT THE TOWN'S RESPONSIBILITY TO INSPECT EACH SITE FOR COMPLIANCE.

4. EACH PARTICULAR SEWER SHALL BE LAID DIRECTLY TO THE BUILDING SEWERED. NOT MORE THAN ONE BUILDING CAN BE CONNECTED WITH A PARTICULAR SEWER THROUGH THE SAME PIPE.

5. SIX INCH (6") SCHEDULE 35 PVC PIPE AS APPROVED BY THE DPW DIRECTOR WILL BE USED TO MAKE CONNECTIONS OF ALL PARTICULAR SEWERS TO WITHIN FIVE FEET OF THE FOUNDATION WALL OF THE BUILDING TO BE SEWERED. A FOUR-INCH (4") HEAVY CAST IRON PIPE OR EQUIVALENT PVC PIPE (SCHEDULE 40) SHALL BE USED THROUGH THE FOUNDATION WALL.

6. MINIMUM ALLOWABLE SLOPE IS 2% OR 1/4 INCH PER FOOT.

7. CLEANOUTS SHALL BE PROVIDED EVERY THREE (3) BENDS OR 100 FEET.

8. ALL PIPES SHALL BE LAID WITH THE BELL END TOWARD THE OUTLET AT THE FOUNDATION (BELL END UPHILL). PIPES SHALL NOT BE REVERSED TO ELIMINATE FITTINGS.

9. ALL JOINTS SHALL BE PUSH ON RUBBER TYPE FITTINGS. NO GLUED PVC JOINTS WILL BE ALLOWED OUTSIDE THE FOUNDATION WALLS. THE CONNECTION TO BE MADE FROM THE SIX-INCH (6") PVC PIPE TO THE FOUR-INCH (4") HEAVY CAST IRON PIPE SHALL BE MADE WITH O RUBBER BOOT ADAPTER. THIS ADAPTER SHALL BE OF AN APPROVED TYPE WITH STAINLESS STEEL COMPRESSION RINGS DESIGNED TO CREATE A WATER-TIGHT SEAL.

PUMP STATION CALCULATIONS:

DESIGN FLOW:
BUILDING 3 , 1ST FLOOR: 14 BEDROOMS
14 X 110 GPD = 1,540 GPD
BUILDING 5 GARAGE: FLOOR DRAINS ONLY, FLOW NEGLIGIBLE.

FLOW RATE CONVERSION:
HOURS PER DAY: 16 (RESIDENTIAL USE)
1,540 GPD ÷ 16 = 96 GPH
96 GPH ÷ 60 MIN/HR = 1.6 GALLONS PER MINUTE (GPM)
1.6 GPM ÷ 7.48 GAL/CFS ÷ 60 SEC/MIN = 0.004 CFS
WET WELL DESIGN:
PROVIDE MIN. 8 HOUR EMERGENCY VOLUME:
TITLE 5 DESIGN FLOW: 1,540 GPD
ACTUAL FLOW (60% OF DESIGN) = 924 GPD
924 / 16 HOURS = 58 GPH
58 GPH X 8 HR = 462 GAL.

USE 4-FT DIAMETER MANHOLE.

WORKING VOLUME:
† = MINIMUM TIME BETWEEN PUMP START-UPS = 60 MINUTES
Q = DESIGN FLOW RATE = 1.6 GPM
60 MIN X 1.6 GPM = 96 GALLONS

INSIDE DIMENSIONS (4' INSIDE DIA):
4 X 3.14 X 7.48 GAL/CF = 94 GALS PER FOOT

PUMP ON TO PUMP OFF: 11.75 INCHES (USE 11 INCHES)

TOTAL HEAD CALCULATION:
PUMP ELEVATION: 755.25
FORCE MAIN END: 766.60
TOTAL LIFT HEAD: 11.35 FT

FORCEMAIN SIZE: 2" SDR 21
FORCEMAIN LENGTH: 104 FEET
TOTAL FRICTION HEAD (DARCY): 7.06'

PUMP CUVE OPERATING POINT:
38 GPM AT 18.4 FT HEAD

PUMP STATION NOTES:
1. CONCRETE: 4,000 PSI MINIMUM AFTER 28 DAYS.
2. ALL REINFORCEMENT PER ASTM C1227-93.
3. TANK SHALL BE RATED FOR H-20 LOADING.
4. JOINT SEALED WITH BUTYL RESIN.
5. ALL CONSTRUCTION FOR THE PUMP CHAMBER AND THE VALVE CHAMBER SHALL BE WATER TIGHT.
6. CONTRACTOR/CHAMBER MANUFACTURER RESPONSIBLE FOR BUOYANCY COMPENSATION @ 100% SUBMERSION FOR PUMP AND VALVE CHAMBERS. CONTRACTOR IS TO SUBMIT SHOP DRAWINGS TO THE ENGINEER THAT CONFIRM THAT THE TANK WILL RESIST BUOYANCY ON ITS OWN.
7. 2" SDR21 PVC FORCE MAIN. FORCE MAIN IS TO HAVE A MINIMUM COVER OF 4' AND HAVE A MINIMUM SLOPE OF 1%.. WHERE THE FORCE MAIN HAS THE POTENTIAL FOR AN AIR LOCK, AN AIR RELEASE ASSEMBLY AND MANHOLE SHOULD BE USED.
8. STAINLESS STEEL SLIDE RAILS ARE TO BE PROVIDED FOR ALL PUMPS.
9. INVERTED J PIPE VENT TO BE INSTALLED TO PROVIDE VENTILATION TO PUMP CHAMBER, OR PROVIDE VENT TO BUILDING SYSTEM.
10. TANK IS TO HAVE A CONTINUOUS SLOPE ALONG TANK BOTTOM TOWARDS PUMP. A BRICK FILLET CAN ALSO BE USED TO PREVENT SEWAGE COLLECTING AT INSIDE BOTTOM CORNERS OF TANK.
11. PUMP STATION MUST HAVE ADEQUATE FORCE MAIN SUPPORT.
12. THRUST BLOCKS ARE TO BE CONSTRUCTED AT ALL CHANGES IN DIRECTION OF THE FORCEMAIN.
13. ALL PUMP STATION STRUCTURES ARE TO BE WATERTIGHT.
14. PUMPS SHALL BE CONNECTED TO THE FACILITY BACK UP GENERATOR OR PROVIDE 8 HOUR BATTERY BACK UP SYSTEM.
15. CONTROL PANEL SHALL BE EQUIPPED WITH AUDIBLE ALARMS AND AUTOMATIC TELEPHONE DIALER IN THE EVENT OF PUMP FAILURE. AUDIBLE ALARM SHALL ME MOUNTED IN A PUBLIC LOCATION IN CLOSE PROXIMITY TO THE PUMPS. SEE PLAN.
16. ALARM SYSTEM SHALL ALARM FOR HIGH LEVEL, LOW LEVEL AND AVAILABLE PUMP FAILURE.
17. CONTRACTOR SHALL OBTAIN A COPY OF THE O&M PLAN PREPARED BY PVI AND MODIFY IF NEEDED BASED ON AS-BUILT CONDITIONS.

ELEVATION TABLE:

FINISH GRADE =	765.0±
INV IN =	760.25
ALARM ON ELEV =	757.67
PUMP ON ELEV =	756.67
PUMP OFF ELEV =	755.75
BOTTOM OF STRUCTURE ELEV =	755.25

NOTE:
FINAL FLOAT ELEVATIONS SHALL BE DETERMINED BY THE ENGINEER UPON RECIEPT OF WET WELL SHOP DRAWING

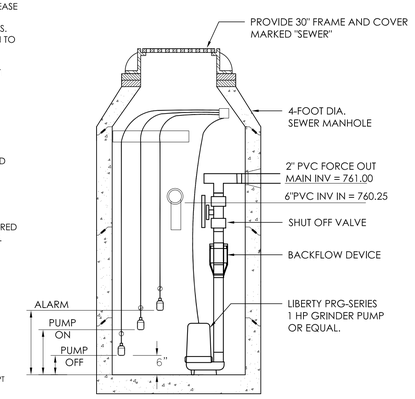

SCHEMATIC SECTION PUMP CHAMBER DETAIL
N.T.S.

CONSULTANT:
PVI SITE DESIGN
PVI Site Design, LLC
Civil Engineering - Land Entitlements
Master Planning - Project Management
339-206-1030

PROJECT:
JEFFERSON MILL REDEVELOPMENT
1665 MAIN STREET, HOLDEN, MA

CLIENT / APPLICANT:
NORTH VILLAGE LOFTS, LLC
35 NORWOOD AVE
NEWTON, MA 02459

REV.:		
1:	03-29-2021	DPW AND P.B. COMMENTS
2:	04-16-2021	DPW COMMENTS
3:	05-13-2021	NEW S.P.A. PLANS

SEAL: COMMONWEALTH OF MASSACHUSETTS TIMOTHY J. POWER CIVIL No. 46906 REGISTERED PROFESSIONAL ENGINEER

ISSUED FOR SITE PLAN REVIEW
JANUARY 29, 2021

DETAILS 2

SCALE:	AS NOTED
JOB NO:	21-001
FILE:	21-001-DETAILS.dwg
DRAWN:	TJP
CHECKED:	TJP
SHEET NO:	C202

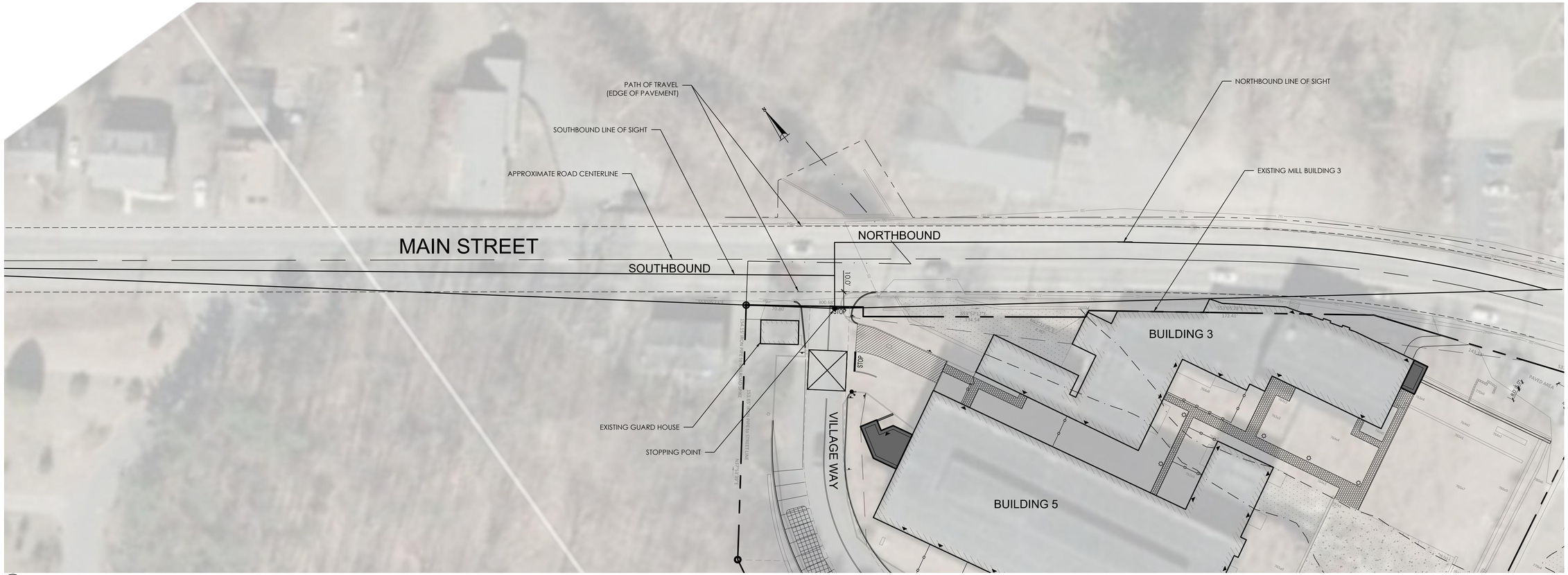

1 MAIN STREET & VILLAGE WAY STOPPING SIGHT DISTANCE FIGURE
SCALE: 1"=30'

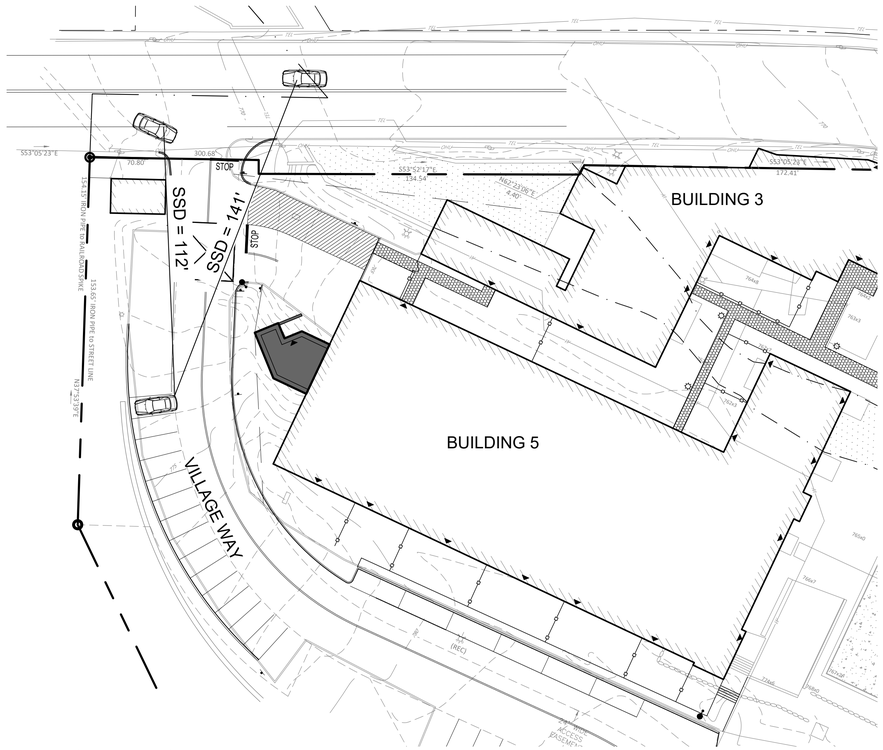

2 RIGHT TURN IN FROM MAIN SSD FIGURE
SCALE: 1"=30'

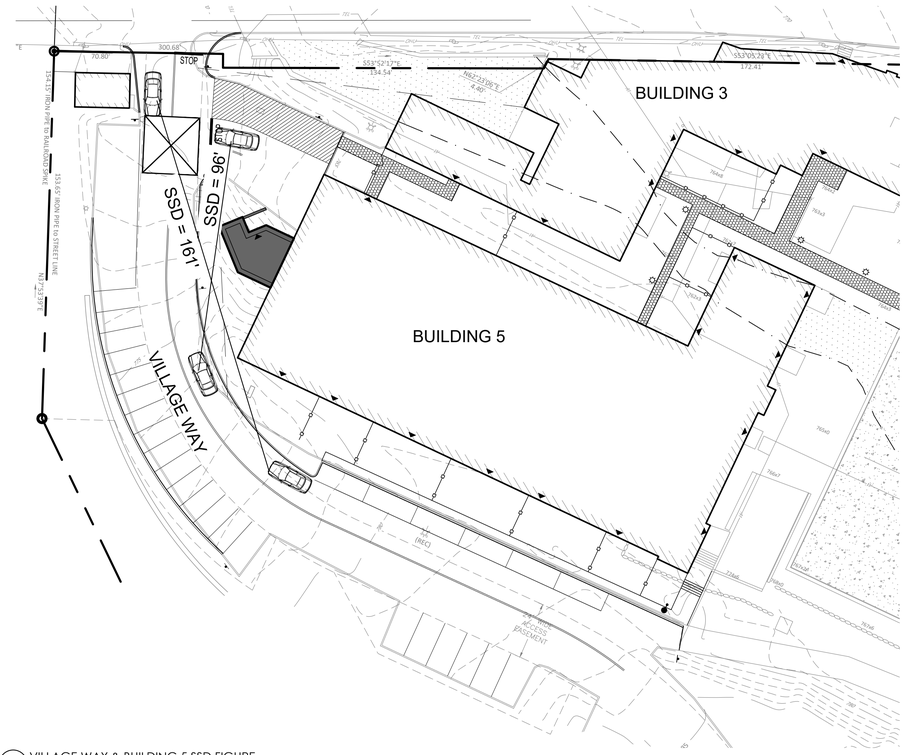

3 VILLAGE WAY & BUILDING 5 SSD FIGURE
SCALE: 1"=30'

NOTES:

1. MAIN STREET STOPPING SITE DISTANCE (SSD) BASED ON TECHNICAL MEMORANDUM PREPARED BY HOWARD STEIN HUDSON ON FEBRUARY 20, 2021. ACTUAL DISTANCES ARE AS FOLLOWS:
   - NORTHBOUND: 440 FEET
   - SOUTHBOUND: 650 FEET
2. VILLAGE WAY SSD BASED ON PVI MEMORANDUM DATED APRIL 16, 2021. SEE PLAN FOR DISTANCES.

0' 15' 30' 60'

CONSULTANT:

PVI SITE DESIGN
PVI Site Design, LLC
Civil Engineering - Land Entitlements
Master Planning - Project Management
339-206-1030

PROJECT:

JEFFERSON MILL REDVELOPMENT
1665 MAIN STREET, HOLDEN, MA

CLIENT / APPLICANT:
NORTH VILLAGE LOFTS, LLC
35 NORWOOD AVE
NEWTON, MA 02459

REV.:		
1: 03-29-2021	DPW AND P.B. COMMENTS	
2: 04-16-2021	DPW COMMENTS	
3: 05-13-2021	NEW S.P.A. PLANS	

SEAL:
COMMONWEALTH OF MASSACHUSETTS
TIMOTHY J. POWER
CIVIL
No. 46908
REGISTERED PROFESSIONAL ENGINEER

ISSUED FOR SITE PLAN REVIEW
JANUARY 29, 2021

LINE OF SITE

SCALE:	AS NOTED
JOB NO:	21-001
FILE:	21-001_LOS FIGURE.dwg
DRAWN:	TJP
CHECKED:	TJP
SHEET NO:	C203