westonandsampson.com

55 Walkers Brook Drive, Suite 100
Reading, MA 01867
tel: 978.532.1900

Application for

SITE PLAN REVIEW/SPECIAL PERMIT

February 2020

New DPW Facility

18 Industrial Drive
Holden, Massachusetts

PREPARED FOR:

Town of Holden

Massachusetts

SUBMITTED TO:

Holden Planning Board

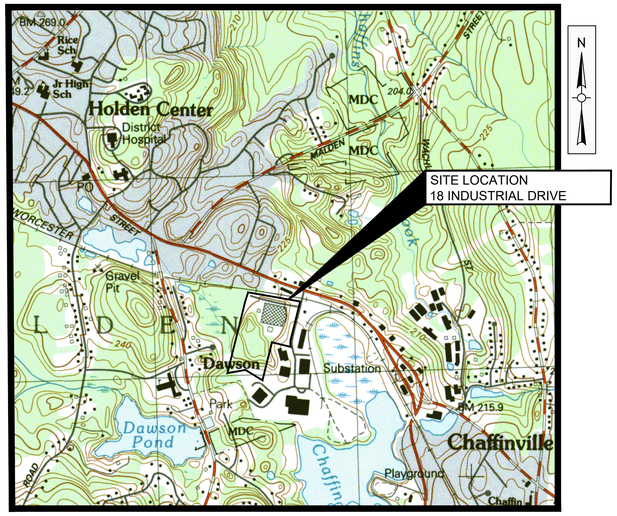

LOCUS MAP
SCALE: 1"=1000'

HOLDEN, MA

DEPARTMENT OF PUBLIC WORKS FACILITY

18 INDUSTRIAL DRIVE, HOLDEN MA
MAP 186, LOT 43

DRAWING INDEX

Holden, MA Zoning Requirements Table		
Industrial	**Required**	**Proposed**
Minimum Lot Area	30,000 sf	997,088 sf
Minimum Frontage	150 ft	760 ft
Minimum Width	200 ft	754 ft
Minimum Front Setback	30 ft	163.5 ft (Building) 595.5 (Salt Shed)
Minimum Side Setback	25 ft (39* ft)	139.8 ft (Building) 113.0 (Salt Shed)
Minimum Rear Setback	40 ft (54* ft)	420.8 ft (Building) 213.7 ft (Salt Shed)
Maximum Building Height	30 ft [a]	DPW - 34.83 ft Salt Shed-37 ft
Maximum Lot Coverage	50%	5.36%

(a) Community and public utility structures provided that the side and rear yards or setbacks required in the district for the highest permitted principal structure are increased 2 feet in width for each foot by which the height of such structures exceeds the height permitted.

* The maximum height of the new DPW building is 34.83 feet, and the salt shed is 37 ft high. Thus, the required side yard setback needs to be increased by 14 feet (2'x7' for the 7-foot exceedance of 30-foot maximum building height). accordingly the 25-foot side yard requirement becomes 39 feet, and the 40-foot rear yard setback becomes 54 feet.

ISSUED FOR PERMITTING

COMMONWEALTH OF MASSACHUSETTS
LAURENCE F. KEEGAN, JR.
CIVIL
NO. 33708
REGISTERED PROFESSIONAL ENGINEER
2-23-20

February 2020

Weston & Sampson

Weston & Sampson Engineers, Inc.
100 Foxborough Boulevard, Suite 250, Foxborough, MA 02035

FOR PERMIT ONLY
NOT FOR CONSTRUCTION

File No.
2150412

GENERAL NOTES

1. TOPOGRAPHICAL INFORMATION BASED UPON SURVEY PERFORMED BY CONTROL POINT ASSOCIATES, INC. .
2. REFER TO EXISTING CONDITIONS FOR SURVEY LEGEND. ALL BIDDERS ARE REQUIRED TO INSPECT THE PROJECT SITE IN ITS ENTIRETY PRIOR TO SUBMITTING THEIR BID, AND BECOME FAMILIAR WITH ALL CONDITIONS AS THEY MAY AFFECT THEIR BID. CONTRACTOR AND SUB-CONTRACTOR SHALL BE FAMILIAR WITH ALL DRAWINGS AND SPECIFICATIONS PRIOR TO COMMENCING THE CONSTRUCTION.
3. LOCATIONS OF ANY UTILITIES SHOWN ON THESE PLANS ARE APPROXIMATE ONLY. CONTRACTOR SHALL BE RESPONSIBLE FOR VERIFYING THE LOCATION OF SUCH UTILITIES, PROTECTING ALL EXISTING UTILITIES AND REPAIRING ANY DAMAGE DONE DURING CONSTRUCTION. THE CONTRACTOR SHALL BE RESPONSIBLE FOR ALL ON-SITE COORDINATION WITH UTILITY COMPANIES AND PUBLIC AGENCIES AND FOR OBTAINING ALL REQUIRED PERMITS AND PAYING ALL REQUIRED FEES. IN ACCORDANCE WITH M.G.L. CHAPTER 82, SECTION 40, INCLUDING AMENDMENTS, CONTRACTORS SHALL NOTIFY ALL UTILITY COMPANIES AND GOVERNMENT AGENCIES IN WRITING PRIOR TO EXCAVATION . CONTRACTOR SHALL ALSO CALL "DIG SAFE" AT (888) 344-7233 NO LESS THAN 72 HOURS, (EXCLUSIVE OF WEEKENDS AND HOLIDAYS), PRIOR TO SUCH EXCAVATION. DOCUMENTATION OF REQUESTS SHALL BE PROVIDED TO PROJECT REPRESENTATIVE PRIOR TO EXCAVATION WORK.
4. WHERE AN EXISTING UTILITY IS FOUND TO CONFLICT WITH THE PROPOSED WORK, THE LOCATION, ELEVATION AND SIZE OF THE UTILITY SHALL BE ACCURATELY DETERMINED WITHOUT DELAY BY THE CONTRACTOR AND THE INFORMATION FURNISHED TO THE ENGINEER FOR RESOLUTION OF THE CONFLICT.
5. THE CONTRACTOR SHALL MAKE ALL ARRANGEMENTS FOR THE ALTERATION AND ADJUSTMENT OF GAS, ELECTRIC, TELEPHONE AND ANY OTHER PRIVATE UTILITIES BY THE UTILITY OWNER AT NO ADDITIONAL COST TO THE TOWN.
6. CONTRACTOR SHALL BE RESPONSIBLE FOR REVIEWING ALL DRAWINGS AND SPECIFICATIONS TO DETERMINE THE EXTENT OF EXCAVATION AND DEMOLITION REQUIRED TO RECEIVE SITE IMPROVEMENTS.
7. ANY DISCREPANCIES OR CONFLICTS BETWEEN THE DRAWINGS AND EXISTING CONDITIONS, EXISTING CONDITIONS TO REMAIN, TEMPORARY CONSTRUCTION, PERMANENT CONSTRUCTION AND WORK OF ADJACENT CONTRACTS SHALL BE BROUGHT TO THE ATTENTION OF THE OWNER BEFORE PROCEEDING. ITEMS ENCOUNTERED IN AREAS OF EXCAVATION THAT ARE NOT INDICATED ON THE DRAWINGS, BUT ARE VISIBLE ON SURFACE, SHALL BE THE CONTRACTOR'S RESPONSIBILITY AND SHALL BE REMOVED AT NO ADDITIONAL COST TO THE TOWN.
8. ANY ALTERATIONS TO THESE DRAWINGS MADE IN THE FIELD DURING CONSTRUCTION SHALL BE RECORDED BY THE GENERAL CONTRACTOR ON "AS-BUILT" DRAWINGS.
9. ALL AREAS DISTURBED BY THE CONTRACTOR'S OPERATIONS OUTSIDE THE PROJECT LIMITS, SHALL BE RESTORED TO THE ORIGINAL CONDITION BY THE CONTRACTOR AT NO ADDITIONAL COST AND TO THE SATISFACTION OF THE OWNER.
10. ALL WORK SHOWN ON THE PLANS AS BOLD SHALL REPRESENT PROPOSED WORK. THE TERM "PROPOSED (PROP)" INDICATES WORK TO BE CONSTRUCTED USING NEW MATERIALS OR, WHERE APPLICABLE, RE-USING EXISTING MATERIALS IDENTIFIED AS "REMOVE AND RESET (R&R)", OR REMOVE, RELOCATE, RESET, (R,R&R).
11. ALL KNOWN EXISTING STATE, COUNTY AND TOWN LOCATION LINES AND PRIVATE PROPERTY LINES HAVE BEEN ESTABLISHED FROM AVAILABLE INFORMATION AND ARE INDICATED ON THE PLANS.
12. THE CONTRACTOR SHALL TAKE ALL NECESSARY PRECAUTIONS TO PROTECT HIS EMPLOYEES, AS WELL AS PUBLIC USERS FROM INJURY DURING THE ENTIRE CONSTRUCTION PERIOD USING ALL NECESSARY SAFEGUARDS, INCLUDING BUT NOT LIMITED TO, THE ERECTION OF TEMPORARY WALKS, STRUCTURES, PROTECTIVE BARRIERS, COVERING, OR FENCES AS NEEDED.
13. THE CONTRACTOR SHALL SUPPLY THE OWNER WITH THE NAME OF THE OSHA "COMPETENT PERSON" PRIOR TO CONSTRUCTION.
14. FILLING OF EXCAVATED AREAS SHALL NOT TAKE PLACE WITHOUT THE PRESENCE OR PERMISSION OF THE OWNER.
15. EXISTING TREES TO REMAIN SHALL BE PROTECTED FROM CONSTRUCTION ACTIVITIES. NO STOCKPILING OF MATERIAL, EQUIPMENT OR VEHICULAR TRAFFIC SHALL BE ALLOWED WITHIN THE DRIP LINE OF TREES TO REMAIN. NO GUYS SHALL BE ATTACHED TO ANY TREE TO REMAIN. WHEN NECESSARY OR AS DIRECTED BY THE ENGINEER, THE CONTRACTOR SHALL ERECT TEMPORARY BARRIERS FOR THE PROTECTION OF EXISTING TREES DURING CONSTRUCTION.
16. TREES AND SHRUBS WITHIN THE LIMITS OF WORK SHALL BE REMOVED ONLY UPON THE APPROVAL OF THE ENGINEER OR AS NOTED ON THE PLANS.
17. THE CONTRACTOR SHALL CALL DIGSAFE AT 1-888-344-7233 AT LEAST 72 HOURS, SATURDAYS, AND HOLIDAYS EXCLUDED, PRIOR TO EXCAVATING AT ANY LOCATION. A COPY OF THE DIGSAFE PROJECT REFERENCE NUMBER(S) SHALL BE GIVEN TO THE OWNER PRIOR TO EXCAVATION.
18. NO FILLING SHALL OCCUR AROUND EXISTING TREES TO REMAIN WITHOUT THE APPROVAL OF THE OWNER OR OWNER REPRESENTATIVE.
19. THE CONTRACTOR SHALL REMOVE ALL SURFACE VEGETATION PRIOR TO GRADING THE SITE. STUMPS SHALL BE STOCKPILED ON SITE FOR DISPOSAL BY THE TOWN. TEMPORARY EROSION CONTROL MEASURES SHOWN ON THE DRAWINGS (INCLUDING SILT FENCE, STRAW WATTLES, OR SILT SOCKS) SHALL BE INSTALLED BY THE CONTRACTOR. THE CONTRACTOR SHALL BE RESPONSIBLE FOR MAINTAINING THESE TEMPORARY EROSION CONTROL MEASURES THROUGHOUT THE PROJECT WHICH COST SHALL BE INCIDENTAL TO THE PROJECT.
20. ALL UNSUITABLE UNCONTAMINATED EXCESS SOIL FROM CONSTRUCTION ACTIVITIES SHALL BE DISPOSED OF THE BY THE CONTRACTOR AT NO ADDITIONAL COST TO THE TOWN. REMOVAL ACTIVITIES SHALL BE ACCORDANCE WITH STATE AND LOCAL REGULATIONS AT NO ADDITIONAL COST TO THE TOWN. SUITABLE SOIL EXCAVATION AS PART OF THE PROJECT MUST MEET ONE OR MORE OF THE MATERIAL REQUIREMENTS SPECIFIED IN 31 00 00 EARTHWORK. ON-SITE FILL MATERIALS, WHICH DO NOT CONFORM TO SPEC 31 00 00, SHALL NOT BE USED BELOW ANY STRUCTURES. IF THE CONTRACTOR PROPOSES TO USE THE EXISTING FILL ON SITE BELOW PAVEMENT AREAS, HE MUST DEMONSTRATE THAT THE FILL MEETS THE STRUCTURAL FILL REQUIREMENTS PER 31 00 00. ALL EXCAVATED FILL MATERIAL WHICH DOES NOT MEET THE REQUIREMENTS OF THE CONTRACT DOCUMENTS SHALL BE REMOVED AND DISPOSED OF OFF-SITE AT NO ADDITIONAL COST.
21. CONTRACTOR IS RESPONSIBLE FOR STAKING CONSTRUCTION BASELINES IN FIELD. NO CONSTRUCTION WILL BE PERFORMED WITHOUT THE PROPOSED BASELINES AND LAYOUTS APPROVED BY THE ENGINEER.
22. NO FILL SHALL CONTAIN HAZARDOUS MATERIALS.
23. CONTRACTOR SHALL PROVIDE TEMPORARY FENCING AROUND PERIMETER OF WORK AREA (LIMIT OF WORK). FENCE SHALL NOT IMPEDE TRAVEL WAYS.
24. ANY QUANTITIES SHOWN ON PLANS ARE FOR COMPARATIVE BIDDING PURPOSES ONLY. IT IS THE CONTRACTOR'S RESPONSIBILITY TO VISIT THE PROJECT SITE TO VERIFY ALL QUANTITIES AND CONDITIONS PRIOR TO SUBMITTING BID.
25. ALL EXISTING DRAINAGE FACILITIES TO REMAIN SHALL BE MAINTAINED FREE OF DEBRIS, SOIL, SEDIMENT, AND FOREIGN MATERIAL AND OPERATIONAL THROUGHOUT THE LIFE OF THE CONTRACT. REMOVE ALL SOIL, SEDIMENT, DEBRIS AND FOREIGN MATERIAL FROM ALL DRAINAGE STRUCTURES, INCLUDING BUT NOT LIMITED TO, DRAINAGE INLETS, MANHOLES AND CATCH BASINS WITHIN THE LIMIT OF WORK AND DRAINAGE STRUCTURES OUTSIDE THE LIMIT OF WORK THAT ARE IMPACTED BY THE WORK FOR THE ENTIRE DURATION OF CONSTRUCTION.
26. CONTRACTOR'S STAGING AREA MUST BE WITHIN THE CONTRACT LIMIT LINE AND IN AREAS APPROVED BY OWNER. ANY OTHER AREAS THAT THE CONTRACTOR MAY WISH TO USE FOR STAGING MUST BE COORDINATED WITH THE OWNER.
27. THE CONTRACTOR SHALL KEEP ALL STREETS, PARKING LOTS AND WALKS THAT ARE NOT RESTRICTED FROM PUBLIC USE DURING CONSTRUCTION BROOM CLEAN AT ALL TIMES. THE CONTRACTOR SHALL USE ACCEPTABLE METHODS AND MATERIALS TO MAINTAIN ADEQUATE DUST CONTROL THROUGHOUT CONSTRUCTION.
28. CONTRACTOR SHALL COORDINATE ALL WORK WITH THE OWNER.
29. CONTRACTOR SHALL DEWATER AS NECESSARY TO PERFORM THE PROPOSED WORK. CONTRACTOR SHALL BE AWARE OF PERCHED GROUNDWATER. (SEE SPECIFICATION SECTION 00320 SUBSURFACE DATA).
30. THE LIMIT OF WORK SHALL BE DELINEATED IN THE FIELD PRIOR TO THE START OF SITE CLEARING OR CONSTRUCTION.
31. DEEP SUMP CATCH BASINS AND STORMWATER BASIN SHALL BE CLEANED FOLLOWING CONSTRUCTION AND SHALL FOLLOW THE OPERATION AND MAINTENANCE PLAN THEREAFTER.
32. HAULING OF EARTH MATERIALS TO AND FROM THE SITE SHALL BE RESTRICTED TO THE HOURS OF 7:00 AM TO 5:00 PM MONDAY THROUGH FRIDAY.
33. ANY BOULDERS 3 CY OR SMALLER SHALL BE CONSIDERED UNDOCUMENTED FILL AND SHALL BE DISPOSED OF AT NO ADDITIONAL COST TO THE TOWN.
34. WORK ON SATURDAYS SHALL ONLY BE CONDUCTED IF PRIOR WRITTEN PERMISSION IS PROVIDED BY THE TOWN.
35. THE TERM "AS DIRECTED" AS USED IN THE CONTRACT DRAWINGS SHALL BE REPLACED WITH "AS REQUIRED".

EROSION AND SEDIMENT CONTROL NOTES

1. ALL SEDIMENT AND EROSION CONTROL DEVICES SHALL BE PUT INTO PLACE PRIOR TO BEGINNING ANY CONSTRUCTION OR DEMOLITION. REFER TO PLAN FOR APPROXIMATE LOCATION OF EROSION AND SEDIMENT CONTROL. REFER TO SPECS AND DETAILS FOR TYPE OF EROSION AND SEDIMENT CONTROL.
2. THE CONTRACTOR SHALL BE RESPONSIBLE FOR THE CONTINUAL MAINTENANCE OF ALL CONTROL DEVICES THROUGHOUT THE DURATION OF THE PROJECT.
3. CONTRACTOR SHALL MEET ALL OF THE STATE OF MASSACHUSETTS D.E.P. AND THE TOWN OF HOLDEN WETLAND ORDINANCE REGULATIONS FOR SEDIMENT AND EROSION CONTROL.
4. EXCAVATED MATERIAL STOCKPILED ON THE SITE SHALL BE SURROUNDED BY A RING OF UNBROKEN SEDIMENT AND EROSION CONTROL FENCE. THE LIMITS OF ALL GRADING AND DISTURBANCE SHALL BE KEPT TO A MINIMUM WITHIN THE APPROVED AREA OF CONSTRUCTION. ALL AREAS OUTSIDE OF THE LIMIT OF CONTRACT SHALL REMAIN TOTALLY UNDISTURBED UNLESS OTHERWISE APPROVED BY OWNER'S REPRESENTATIVE.
5. ALL CATCH BASINS AND DRAIN GRATES WITHIN LIMIT OF CONTRACT SHALL BE PROTECTED WITH FILTER FABRIC DURING THE ENTIRE DURATION OF CONSTRUCTION.
6. EROSION CONTROL BARRIERS TO BE INSTALLED AT THE TOE OF SLOPES. SEE GRADING & DRAINAGE PLANS, NOTES, DETAILS AND SPECIFICATIONS.
7. ANY AREA OUTSIDE THE PROJECT LIMIT THAT IS DISTURBED SHALL BE RESTORED TO ITS ORIGINAL CONDITION AT NO COST TO THE OWNER.
8. THE CONTRACTOR SHALL PROVIDE DUST CONTROL FOR CONSTRUCTION OPERATIONS AS APPROVED BY OWNER.
9. ALL POINTS OF CONSTRUCTION EGRESS OR INGRESS SHALL BE MAINTAINED TO PREVENT TRACKING OR FLOWING OF SEDIMENT ON TO PUBLIC/PRIVATE ROADS.

DEMOLITION & SITE PREPARATION NOTES

1. THE CONTRACTOR SHALL INCLUDE IN THE BID THE COST OF REMOVING ANY EXISTING SITE FEATURES AND APPURTENANCES NECESSARY TO ACCOMPLISH THE CONSTRUCTION OF THE PROPOSED SITE IMPROVEMENTS. THE CONTRACTOR SHALL ALSO INCLUDE IN THE BID THE COST NECESSARY TO RESTORE SUCH ITEMS IF THEY ARE SCHEDULED TO REMAIN AS PART OF THE FINAL SITE IMPROVEMENTS. REFER TO PLANS TO DETERMINE EXCAVATION, DEMOLITION AND TO DETERMINE THE LOCATION OF THE PROPOSED SITE IMPROVEMENTS.
2. THE OWNER RESERVES THE RIGHT TO REVIEW ALL MATERIALS DESIGNATED FOR REMOVAL AND TO RETAIN OWNERSHIP OF SUCH MATERIALS. IF THE OWNER RETAINS ANY MATERIAL THE CONTRACTOR SHALL MAKE ARRANGEMENTS WITH THE OWNER TO HAVE THOSE MATERIALS REMOVED OFF SITE AT NO ADDITIONAL COST.
3. UNLESS SPECIFICALLY NOTED TO BE SAVED / STOCKPILED (R&S) OR REUSED / RELOCATED (R&R), ALL SITE FEATURES CALLED FOR REMOVAL (REM) SHALL BE REMOVED WITH THEIR FOOTINGS, ATTACHMENTS, BASE MATERIAL, ETC, TRANSPORTED FROM THE SITE TO BE DISPOSED OF IN A LAWFUL MANNER AT AN ACCEPTABLE DISPOSAL SITE AND AT NO COST TO THE OWNER.
4. ALL EXISTING SITE FEATURES TO REMAIN SHALL BE PROTECTED THROUGHOUT THE CONSTRUCTION PERIOD. ANY FEATURES DAMAGED DURING CONSTRUCTION OPERATIONS SHALL BE REPAIRED OR REPLACED TO THE SATISFACTION OF THE OWNER'S REPRESENTATIVE AT NO ADDITIONAL COST.
5. DURING EARTHWORK OPERATIONS, CONTRACTOR SHALL TAKE CARE TO NOT DISTURB EXISTING MATERIALS TO REMAIN, OUTSIDE THE LIMITS OF EXCAVATION AND BACKFILL AND SHALL TAKE WHATEVER MEASURES NECESSARY, AT THE CONTRACTOR'S EXPENSE, TO PREVENT ANY EXCAVATED MATERIAL FROM COLLAPSING. ALL BACKFILL MATERIALS SHALL BE PLACED AND COMPACTED AS SPECIFIED TO THE SUBGRADE REQUIRED FOR THE INSTALLATION OF THE REMAINDER OF THE CONTRACT WORK.
6. IT SHALL BE THE CONTRACTOR'S OPTION, WITH CONCURRENCE OF THE OWNER, TO REUSE EXISTING GRAVEL IF IT MEETS THE REQUIREMENTS OF THE SPECIFICATIONS FOR GRAVEL BORROW.
7. ALL ITEMS CALLED FOR REMOVAL SHALL BE REMOVED TO FULL DEPTH INCLUDING ALL FOOTINGS, FOUNDATIONS, AND OTHER APPURTENANCES, EXCEPT AS SPECIFICALLY NOTED OTHERWISE.
8. 'CLEAR AND GRUB VEGETATION' SHALL INCLUDE REMOVAL OF GRASS, SHRUBS, AND UNDERBRUSH, REMOVAL OF ROOTS, ROUGH GRADING, INSTALLATION OF LOAM (IF APPLICABLE), FINE GRADING, SEEDING AND TURF ESTABLISHMENT BY THE CONTRACTOR.
9. TREES DESIGNATED FOR REMOVAL SHALL BE TAGGED BY CONTRACTOR AND APPROVED BY OWNER'S REPRESENTATIVE PRIOR TO COMMENCEMENT OF CONSTRUCTION.
10. THE STORAGE OF MATERIALS AND EQUIPMENT WILL BE PERMITTED AT LOCATIONS DESIGNATED BY OWNER OR OWNER'S REPRESENTATIVE. PROTECTION OF STORED MATERIALS AND EQUIPMENT SHALL BE THE SOLE RESPONSIBILITY OF THE CONTRACTOR.
11. STRIP & STORE EXISTING TOPSOIL FOR LATER REUSE WHERE APPROPRIATE, AND AS NOTED ON PLAN, WITH APPROPRIATE EROSION AND SEDIMENT CONTROLS.
12. LOAM / TOP SOIL DESIGNATED FOR REUSE AS GENERAL FILL SHALL BE BLENDED WITH SUITABLE BORROW MATERIAL AS SPECIFIED.
13. THE CONTRACTOR SHALL PROTECT EXISTING TREES TO REMAIN. CONTRACTOR SHALL INSTALL TREE PROTECTION BARRIER AFTER CLEARING UNDERBRUSH AND TAKE DUE CARE TO PREVENT INJURY TO TREES DURING CLEARING OPERATIONS.

LAYOUT & MATERIALS NOTES

1. REFER TO EXISTING CONDITIONS PLANS FOR SURVEY INFORMATION (SHEET C101).
2. COORDINATE ALL LAYOUT ACTIVITIES WITH THE SCOPE OF WORK CALLED FOR BY DEMOLITION, GRADING AND UTILITIES OPERATIONS ENCOMPASSED BY THIS CONTRACT. SET, PROTECT AND REPLACE REFERENCE STAKES AS NECESSARY OR AS REQUIRED BY THE OWNER'S REPRESENTATIVE.
3. ALL WORK SHALL BE PERFORMED BY CONTRACTOR UNLESS SPECIFICALLY INDICATED THAT THE WORK WILL BE PERFORMED "BY TOWN".
4. TO FACILITATE LAYOUT OF PROPOSED SITE FEATURES AND FACILITIES, LAYOUT INFORMATION FOR CERTAIN FUTURE WORK, WHICH IS NOT INCLUDED WITHIN THE SCOPE OF THIS CONTRACT HAS BEEN PROVIDED ON THE LAYOUT AND MATERIALS PLAN FOR INFORMATION ONLY. THE LAYOUT OF SITE AMENITIES AND FENCES MUST BE APPROVED BY THE OWNER'S REPRESENTATIVE PRIOR TO INSTALLATION. SOME ITEMS ARE "NOT IN CONTRACT" (NIC) AND SHOWN FOR REFERENCE ONLY.
5. THE LAYOUT OF SITE AMENITIES AND FENCES MUST BE APPROVED BY THE OWNER'S REPRESENTATIVE PRIOR TO INSTALLATION.
6. THE LAYOUT OF ALL NEW PATHWAYS / WALKWAYS AND THE GRADING OF ALL SLOPES AND CROSS SLOPES SHALL CONFORM TO THE COMMONWEALTH OF MASSACHUSETTS RULES AND REGULATIONS FOR HANDICAP ACCESS CMR 521, AND THE AMERICANS WITH DISABILITIES ACT (ADA), TITLE 3. THE CONTRACTOR SHALL NOTIFY THE OWNER IMMEDIATELY OF ANY DISCREPANCIES BETWEEN ACTUAL CONDITIONS AND THOSE REQUIRED.
7. ALL LAYOUT LINES, OFFSETS, OR REFERENCES TO LOCATING OBJECTS ARE EITHER PARALLEL OR PERPENDICULAR UNLESS OTHERWISE DESIGNATED WITH ANGLE OFFSETS NOTED.
8. ALL PROPOSED SITE FEATURES SHALL BE LAID OUT AND STAKED FOR REVIEW AND APPROVAL BY THE OWNER'S REPRESENTATIVE PRIOR TO COMMENCEMENT OF INSTALLATION. ANY REQUIRED ADJUSTMENTS TO THE LAYOUT SHALL BE UNDERTAKEN AS DIRECTED, AT NO ADDITIONAL COST TO THE OWNER.
9. ALL PROPOSED PAVEMENTS SHALL MEET THE LINE AND GRADE OF EXISTING ADJACENT PAVEMENT SURFACES AND SHALL BE TREATED WITH AN RS-1 TACK COAT AT POINT OF CONNECTION. ALL PATHWAY WIDTHS SHALL BE AS NOTED ON THE LAYOUT AND MATERIALS PLAN.
10. THE CONTRACTOR SHALL VERIFY ALL DIMENSIONS AND GRADES ON THE GROUND AND REPORT ANY DISCREPANCIES IMMEDIATELY TO THE OWNER.
11. THE CONTRACTOR SHALL BE RESPONSIBLE FOR FIELD MEASUREMENT OF ALL PROPOSED FENCES AND GATES.
12. THE DEPTH OF LOAM BORROW FOR ALL PROPOSED LAWN AREAS SHALL BE 4" MINIMUM. ALL DISTURBED AREAS SHALL BE RESTORED WITH LOAM AND SEED UNLESS OTHERWISE NOTED
13. ALL REFERENCES TO LOAM AND SEED (L&S) REFER TO HYDROMULCH SEEDED LAWN.
14. REFER TO DETAIL DRAWINGS FOR CONSTRUCTION DETAILS.

GRADING, UTILITIES & DRAINAGE NOTES

1. ALL WORK RELATING TO INSTALLATION, RENOVATION OR MODIFICATION OF WATER, DRAINAGE AND/OR SEWER SERVICES SHALL BE PERFORMED IN ACCORDANCE WITH THE STANDARDS OF THE TOWN OF HOLDEN.
2. THE CONTRACTOR SHALL VERIFY ALL DIMENSIONS AND GRADES ON THE GROUND AND REPORT ANY DISCREPANCIES IMMEDIATELY TO THE OWNER.
3. ALL GRADING IS TO BE SMOOTH AND CONTINUOUS WHERE PROPOSED GRAVEL SURFACE MEETS EXISTING SURFACE, BLEND THE TWO PAVEMENTS AND ELIMINATE ROUGH SPOTS AND ABRUPT GRADE CHANGES AND MEET LINE AND GRADE OF EXISTING CONDITIONS WITH NEW IMPROVEMENTS.
4. CONTRACTOR SHALL MAINTAIN POSITIVE DRAINAGE (1.5% MINIMUM) AWAY FROM ALL BUILDING FOUNDATIONS AND STRUCTURES.
5. CONTRACTOR SHALL ENSURE ALL AREAS ARE PROPERLY PITCHED TO DRAIN, WITH NO SURFACE WATER PONDING OR PUDDLING.
6. ALL NEW WALKWAYS / ACCESS PATHS MUST CONFORM TO CURRENT AMERICANS WITH DISABILITIES ACT (ADA) REGULATIONS: WALKWAYS SHALL MAINTAIN A CROSS PITCH OF NOT MORE THAN ONE AND A HALF PERCENT (1.5%) AND THE RUNNING SLOPE (PARALLEL TO THE DIRECTION OF TRAVEL) BETWEEN 1% MIN. AND 5% MAX.
7. MINIMUM SLOPE ON ALL WALKWAYS WILL BE 1:100 OR 1% TO PROVIDE POSITIVE DRAINAGE. ANY DISCREPANCIES NOT ALLOWING THIS TO OCCUR SHALL BE REPORTED TO THE ENGINEER PRIOR TO CONTINUING WORK.
8. ALL UTILITY GRATES, COVERS OR OTHER SURFACE ELEMENTS INTENDED TO BE EXPOSED AT GRADE SHALL BE FLUSH WITH THE ADJACENT FINISHED GRADE AND ADJUSTED TO PROVIDE A SMOOTH TRANSITION AT ALL EDGES.
9. THE CONTRACTOR SHALL SET SUBGRADE ELEVATIONS TO ALLOW FOR POSITIVE DRAINAGE AND PROVIDE EROSION CONTROL DEVICES, STRUCTURES, MATERIALS AND CONSTRUCTION METHODS TO DIRECT SILT MIGRATION AWAY FROM DRAINAGE AND OTHER UTILITY SYSTEMS, PUBLIC/PRIVATE STREETS AND WORK AREAS. CLEAN BASINS REGULARLY AND AT THE END OF THE PROJECT.
10. EXCAVATION REQUIRED WITHIN PROXIMITY OF KNOWN EXISTING UTILITY LINES SHALL BE DONE BY HAND. CONTRACTOR SHALL REPAIR ANY DAMAGE TO EXISTING UTILITY LINES OR STRUCTURES INCURRED DURING CONSTRUCTION OPERATIONS AT NO COST TO THE OWNER.
11. WHERE NEW EARTHWORK MEETS EXISTING EARTHWORK, CONTRACTOR SHALL BLEND NEW EARTHWORK SMOOTHLY INTO EXISTING, PROVIDING VERTICAL CURVES OR ROUNDS AT ALL TOP AND BOTTOM OF SLOPES.
12. WHERE A SPECIFIC LIMIT OF WORK LINE IS NOT OBVIOUS OR IMPLIED, BLEND GRADES TO EXISTING CONDITIONS WITHIN 5 FEET OF PROPOSED CONTOURS.
13. RESTORE ALL DISTURBED AREAS AND LIMITS OF ALL REMOVALS TO LOAM AND SEED (L&S) UNLESS OTHERWISE NOTED.
14. SEE EARTHWORK SECTION OF SPECIFICATIONS FOR SPECIFIC EXCAVATION AND FILLING PROCEDURES.
15. FOR STRUCTURE REMODELING (REMOD), CONSTRUCTION METHODS SHALL FOLLOW MASSACHUSETTS DOT STANDARD SPEC. LATEST EDITION (SECTION 220)

ABBREVIATIONS

GENERAL

ABAN	ABANDON
ADJ	ADJUST
℄	BASELINE
BIT. CONC.	BITUMINOUS CONCRETE
B.M.	BENCH MARK
BWLL	BROKEN WHITE LANE LINE
CEM. CONC.	CEMENT CONCRETE
CLF	CHAIN LINK FENCE
CTE	CONNECT TO EXISTING
E.C.	ELECTRICAL CONTRACTOR
EOP	EDGE OF PAVEMENT
EQ	EQUIPMENT
EXIST. (OR EX.)	EXISTING
GRAN. CURB	GRANITE CURB
FDN	FOUNDATION
FF	FINISHED FLOOR
F.L. (OR F)	FLOW LINE
G.C.	GENERAL CONTRACTOR
H.C.	HANDICAP
HMA	HOT MIX ASPHALT
L.O.W	LIMIT OF WORK
MB	MAIL BOX
M.H.B.	MASSACHUSETTS HIGHWAY BOUND
NIC	NOT IN CONTRACT
N.T.S.	NOT TO SCALE
⅊	PROPERTY LINE
P.C.	PLUMBING CONTRACTOR
PROP	PROPOSED
PROT	PROTECT
PVMT	PAVEMENT
P.W.W.	PAVED WATERWAY
RC	REINFORCED CONCRETE
REM	REMOVE
REMOD	REMODEL
RL	ROOF LEADER
RET	RETAIN
R&R	REMOVE AND RESET
R,R&R	REMOVE, RELOCATED AND RESET
R&D	REMOVE AND DISPOSE
R.O.W.	RIGHT-OF-WAY
R&S	REMOVE AND STACK
SB	STONE BOUND
SB/DH	STONE BOUND/ DRILL HOLE
SWEL	SOLID WHITE EDGE LINE
SYEL	SOLID YELLOW EDGE LINE
TEMP.	TEMPORARY
TYP.	TYPICAL
VIF	VERIFY IN FIELD
WCR	WHEELCHAIR RAMP

UTILITIES

ACCM PIPE	ASPHALT COATED CORRUGATED METAL PIPE
CB	CATCH BASIN
CBCI	CATCH BASIN W/ CURB INLET
CI	CURB INLET
CI	CAST IRON
C.I.T.	CHANGE IN TYPE
CIP	CAST IRON PIPE
CMP	CORRUGATED METAL PIPE
CO	CLEANOUT
DI	DUCTILE IRON PIPE
DMH	DRAIN MANHOLE
DS	DOWN SPOUT
GICI	GUTTER INLET W/ CURB INLET
F&C	FRAME AND COVER
F&G	FRAME AND GRATE
GI	GUTTER INLET
GV	GATE VALVE
GW	GARAGE WASTE
HDPE	HIGH DENSITY POLYETHYLENE PIPE
HH	HANDHOLE
HYD	HYDRANT
INV. ELEV.	INVERT ELEVATION
LB	LEACHING BASIN
LC	LEACHING CHAMBER
LG	LEACHING GALLEY
LP	LIGHT POLE
OCS	OUTLET CONTROL STRUCTURE
OGT	OIL AND GRIT TRAP
OHW	OVERHEAD WIRE
PVC	POLYVINYL CHLORIDE
RCP	REINFORCED CONCRETE PIPE
SMH	SEWER MANHOLE
SWTU	STORM WATER TREATMENT UNIT
UP	UTILITY POLE
UPLP	UTILITY POLE WITH LIGHT
VC	VITRIFIED CLAY PIPE
WG	WATER GATE

ALIGNMENT/GRADING

BC	BOTTOM OF CURB
BW	BOTTOM OF WALL
CC	CENTER OF CURVE
ELEV	ELEVATION
L.P.	LOW POINT
H.P.	HIGH POINT
PC	POINT OF CURVATURE
PCC	POINT OF COMPOUND CURVATURE
PI	POINT OF INTERSECTION
PT	POINT OF TANGENCY
PRC	POINT OF REVERSE CURVATURE
PVI	POINT OF VERTICAL INTERSECTION
PVC	POINT OF VERTICAL CURVATURE
PVT	POINT OF VERTICAL TANGENCY
R	RADIUS OF CURVATURE
S.S.D.	STOPPING SIGHT DISTANCE
STA	STATION
TC	TOP OF CURB
TW	TOP OF WALL

GENERAL SYMBOLS

EXISTING	PROPOSED	
SEE LEGEND ON EXISTING CONDITIONS PLAN C101	CB	CATCH BASIN
	CBCI	CATCH BASIN CURB INLET
		EDGE OF ROAD
		HANDHOLE (NUMBER AS NOTED)
	E E	ELECTRIC MANHOLE
	T T	TELEPHONE MANHOLE
		SEWER MANHOLE
		DRAINAGE MANHOLE
		GAS GATE
		WATER GATE VALVE
		HYDRANT
		WELL
	OR LP	LIGHTPOLE
	D	DRAIN PIPE
	S S	SEWER MAIN
	S	SEWER MAIN BY P.C.
	E E	ELECTRIC DUCT
	T T	TELEPHONE/COMMUNICATIONS/FIRE ALARM
	GW GW	GARAGE WASTE LINE
	GW	GARAGE WASTE LINE BY P.C.
	V	VENTS BY P.C.
	GAS GAS	GAS MAIN
	W	WATER MAIN
	OHW	OVERHEAD WIRES
	OR	GUARD RAIL (SIZE AND TYPE NOTED)
		HIGHWAY / PROPERTY BOUND (TYPE NOTED)
		CITY OR TOWN OR COUNTY LAYOUT LINE
		CITY,TOWN OR COUNTY BOUNDARY
		BASE OR SURVEY LINE
		CENTERLINE OF CONSTRUCTION
		PROPERTY LINE
	WCR	WHEELCHAIR RAMP (WCR)
	SEE PLANS	TREE (SIZE AND TYPE NOTED)
	SEE PLANS	FENCE (SIZE AND TYPE NOTED)
	TP-2 OR TP1	TEST PIT
		MONITORING WELL
	OHW OHW	UTILITY POLE
		GUY POLE
		FLAG POLE
		SIGN
		TREE LINE
		BOLLARD
		BIKE RACK
		SAWCUT
		EROSION CONTROL (SPECIFIED ON PLANS)
		OBSERVATION WELL
		LIMIT OF WORK
		WETLAND BUFFER
		TEMPORARY FENCE
		CONCRETE BOUND FOUND
		TEMPORARY BENCHMARK (TBM)

Project:
TOWN OF HOLDEN, MA

DEPARTMENT OF PUBLIC WORKS

18 INDUSTRIAL DRIVE
HOLDEN, MA

Weston & Sampson
Weston & Sampson Engineers, Inc.
100 Foxborough Boulevard Suite 250
Foxborough, MA 02035
(508) 698-3034 (800) SAMPSON
www.westonandsampson.com

Consultants:

Seal:
COMMONWEALTH OF MASSACHUSETTS
LAURENCE F. KEEGAN, JR.
CIVIL
NO. 33708
REGISTERED PROFESSIONAL ENGINEER
2-13-20

Revisions:

Rev	Date	Description

Issued For: PERMITTING

FOR PERMIT ONLY
NOT FOR CONSTRUCTION

SCALE: AS NOTED

Date:	JANUARY 13, 2020
Drawn By:	EC
Reviewed By:	EC
Approved By:	LFK
W&S Project No:	2150412

Drawing Title:

GENERAL NOTES AND LEGEND

Sheet Number:

C000

LEGEND

- EDGE OF WOODS
- DECIDUOUS TREE
- CONIFEROUS TREE
- SHRUB/BUSH
- SIGN
- UTILITY POLE
- LIGHT POLE
- HYDRANT
- WATER SHUTOFF
- GAS VALVE
- WATER VALVE
- MONUMENT
- IRON PIN / IRON ROD
- HANDICAP SPACE
- SANITARY MANHOLE (SMH)
- STORM MANHOLE (STMH)
- CATCHBASIN (CB)
- METAL POST/BOLLARD (BOL)
- ELECTRIC MANHOLE (MHE)
- UNKNOWN MANHOLE
- TELEPHONE MANHOLE (MHT)
- MAJOR CONTOUR LINE
- MINOR CONTOUR LINE
- SW-TP1 STORMWATER TEST PITS
- 100 YEAR FLOOD AREA PER W&S FLOOD STUDY
- B-1 GEOTECHNICAL BORING DESIGNATION AND APPROXIMATE LOCATION
- TP-11 GEOTECHNICAL TEST PIT DESIGNATION AND APPROXIMATE LOCATION
- PROPERTY LINE
- EASEMENT
- ST — STORM SEWER LINE
- SS — SANITARY SEWER LINE
- W — WATER LINE
- G — GAS LINE
- SIG — SIGNAL WIRE LINE
- C — CABLE LINE
- FO — FIBER OPTIC LINE
- LPS — LOW PRESSURE SEWER LINE
- E — ELECTRIC LINE
- H — HEATING LINE
- T — TELEPHONE LINE
- UGE — UNDERGROUND ELECTRIC LINE

GENERAL NOTES:

1. EXISTING CONDITIONS SHOWN ON THIS PLAN ARE FROM GROUND SURVEY CONDUCTED BY CONTROL POINT ASSOCIATES INC ON AUGUST AND SEPTEMBER 2017, UPDATED ON APRIL 4, 2019 AND JULY 11 2019. (SEE SURVEY NOTES)
2. BEARINGS REFER TO THE MASSACHUSETTS NAD 83 STATE PLANE COORDINATE SYSTEM (MAINLAND ZONE).
3. ELEVATIONS REFER TO THE 1988 NORTH AMERICAN DATUM (NAVD 88).
4. UNDERGROUND UTILITY, STRUCTURE AND FACILITY LOCATIONS DEPICTED HEREON HAVE BEEN COMPILED, IN PART, FROM RECORD MAPPING AND OTHER DATA SUPPLIED BY THE RESPECTIVE UTILITY COMPANIES, GOVERNMENTAL AGENCIES AND/OR OTHER SOURCES. THESE LOCATIONS MUST BE CONSIDERED APPROXIMATE IN NATURE. ADDITIONALLY, OTHER SUCH FEATURES MAY EXIST ON THE SITE, THE EXISTENCE OF WHICH ARE UNKNOWN TO WESTON & SAMPSON. THE EXISTENCE, SIZE AND LOCATION OF ALL SUCH FEATURES MUST BE DETERMINED AND VERIFIED IN THE FIELD BY THE APPROPRIATE AUTHORITIES PRIOR TO CONSTRUCTION. CALL BEFORE YOU DIG.
5. THE WETLANDS DELINEATION LINE WAS PLACED IN THE FIELD BY ECOTEC,INC ON JULY 20, 2017, AND FIELD LOCATED BY CONTROL POINT ASSOCIATES, INC. ON AUGUST 24, 2017.

SURVEY NOTES:

1. PROPERTY KNOWN AS LOT 43 AS SHOWN ON THE TOWN OF HOLDEN, WORCESTER COUNTY, COMMONWEALTH OF MASSACHUSETTS; MAP NO. 186.
2. AREA = 997,225 SQUARE FEET OR 22.89 ACRES
3. LOCATION OF UNDERGROUND UTILITIES ARE APPROXIMATE. LOCATIONS AND SIZES ARE BASED ON UTILITY MARK-OUTS, ABOVE GROUND STRUCTURES THAT WERE VISIBLE & ACCESSIBLE IN THE FIELD, AND THE MAPS AS LISTED IN THE REFERENCES AVAILABLE AT THE TIME OF THE SURVEY. AVAILABLE AS-BUILT PLANS AND UTILITY MARKOUT DOES NOT ENSURE MAPPING OF ALL UNDERGROUND UTILITIES AND STRUCTURES. BEFORE ANY EXCAVATION IS TO BEGIN, ALL UNDERGROUND UTILITIES SHOULD BE VERIFIED AS TO THEIR LOCATION, SIZE AND TYPE BY THE PROPER UTILITY COMPANIES. CONTROL POINT ASSOCIATES, INC. DOES NOT GUARANTEE THE UTILITIES SHOWN COMPRISE ALL SUCH UTILITIES IN THE AREA EITHER IN SERVICE OR ABANDONED.
4. THIS PLAN IS BASED ON INFORMATION PROVIDED BY A SURVEY PREPARED IN THE FIELD BY CONTROL POINT ASSOCIATES, INC. AND OTHER REFERENCE MATERIAL AS LISTED HEREON.
5. THIS SURVEY WAS PREPARED WITHOUT THE BENEFIT OF A TITLE REPORT AND IS SUBJECT TO THE RESTRICTIONS, COVENANTS AND/OR EASEMENTS THAT MAY BE CONTAINED THEREIN.
6. BY GRAPHIC PLOTTING ONLY PROPERTY IS LOCATED IN FLOOD HAZARD ZONE A (AREAS OF 100-YEAR FLOOD; BASE FLOOD ELEVATIONS AND FLOOD HAZARD FACTORS NOT DETERMINED) PER REF. #2
7. ELEVATIONS REFER TO THE NORTH AMERICAN VERTICAL DATUM OF 1988 (NAVD88), BASED ON GPS OBSERVATIONS UTILIZING THE KEYSTONE VRS NETWORK (KEYNETGPS).

   TEMPORARY BENCH MARKS SET:
   TBM-A: X-CUT ON HYDRANT BOLT. ELEVATION = 722.83
   TBM-B: MAG NAIL IN ASPHALT PAVEMENT. ELEVATION = 732.95

   PRIOR TO CONSTRUCTION IT IS THE CONTRACTOR'S RESPONSIBILITY TO VERIFY THAT THE BENCHMARKS ILLUSTRATED ON THIS SKETCH HAVE NOT BEEN DISTURBED AND THEIR ELEVATIONS HAVE BEEN CONFIRMED. ANY CONFLICTS MUST BE REPORTED PRIOR TO CONSTRUCTION.
8. THE OFFSETS SHOWN ARE NOT TO BE USED FOR THE CONSTRUCTION OF ANY STRUCTURE, FENCE, PERMANENT ADDITION, ETC.
9. THE DELINEATION LINE WAS PLACED IN THE FIELD BY ECOTEC,INC ON JULY 20, 2017, AND FIELD LOCATED BY CONTROL POINT ASSOCIATES, INC. ON AUGUST 24, 2017.
10. THIS SURVEY WAS PERFORMED DURING A PERIOD WHEN THE GROUND WAS SNOW COVERED. UTILITY STRUCTURES AND SITE FEATURES HAVE BEEN LOCATED AND IDENTIFIED WHICH WERE VISIBLE ON THE DATE OF THE FIELD SURVEY. REMOVAL OF THIS NOTE FROM THE SURVEY WILL REQUIRE A LATER SITE VISIT AFTER THE SNOW HAS MELTED.

Project:
TOWN OF HOLDEN, MA

DEPARTMENT OF PUBLIC WORKS
18 INDUSTRIAL DRIVE
HOLDEN, MA

Weston & Sampson
Weston & Sampson Engineers, Inc.
100 Foxborough Boulevard Suite 250
Foxborough, MA 02035
(508) 698-3034 (800) SAMPSON
www.westonandsampson.com

Consultants:

Seal:
COMMONWEALTH OF MASSACHUSETTS
LAURENCE F. KEEGAN, JR.
CIVIL
NO. 33708
REGISTERED PROFESSIONAL ENGINEER
2-13-20

Revisions:

Rev	Date	Description

Issued For: PERMITTING

FOR PERMIT ONLY
NOT FOR CONSTRUCTION

SCALE: AS NOTED

Date:	JANUARY 13, 2020
Drawn By:	EC
Reviewed By:	EC
Approved By:	LFK
W&S Project No:	2150412

Drawing Title:

EXISTING CONDITIONS PLAN

Sheet Number:

C101

SITE PREPARATIONS LEGEND

- STABILIZED CONST ENTRANCE
- REMOVE PAVEMENT
- CLEAR & GRUB
- TREE PROTECTION
- COMPOST FILTER TUBES
- LIMIT OF WORK
- REM PIPE OR UTILITY
- INLET PROTECTION

NOTES:

1. SITE PERIMETER SHALL HAVE COMPOST FILTER TUBES INSTALLED WITHIN THE LIMIT OF WORK. WHERE LIMIT OF WORK EXTENDS INTO ADJACENT ROADWAYS OR PROPERTY, THE LOCATION OF COMPOST FILTER TUBES SHALL BE LOCATED AT EDGE OF ROADWAY OR PROPERTY. CONTRACTOR SHALL ADJUST AS REQUIRED AT NO ADDITIONAL COST TO OWNER.
2. TREE REMOVAL AND GRUBBING WILL BE REQUIRED BY THE GENERAL CONTRACTOR (G.C.). G.C. SHALL CLEAR AND GRUB AS NECESSARY TO COMPLETE THE WORK.
3. ALL SAW CUT/ EXCAVATED PAVEMENT IN EXISTING ROADWAYS SHALL BE RESTORED AT NO ADDITIONAL COST TO THE OWNER.
4. CONTRACTOR SHALL MAINTAIN CONSTRUCTION ENTRANCE/PAD THROUGHOUT ENTIRE PROJECT.
5. ALL EXISTING BITUMINOUS CONCRETE SHALL BE REMOVED TO COMPLETE THE PROPOSED WORK WITHOUT ADJUSTMENT TO COMPENSATION.
6. PRIOR TO ANY WORK DISTURBANCE , THE CONTRACTOR SHALL PHYSICALLY MARK LIMITS OF NO LAND DISTURBANCE ON THE SITE WITH TAPE, SIGNS, OR ORANGE CONSTRUCTION FENCE, SO THAT WORKERS CAN SEE THE AREAS TO BE PROTECTED. THESE MARKERS SHALL BE INSPECTED DAILY.
7. THE CONTRACTOR SHALL REMOVE THE SEDIMENT FROM COMPOST FILTER TUBES WHEN THE VOLUME REACHES $\frac{1}{3}$ TO $\frac{1}{2}$ THE HEIGHT OF A COMPOST TUBES.
8. SEDIMENT FROM SEDIMENT TRAPS SHALL BE REMOVED WHEN THE DESIGN CAPACITY HAS BEEN REDUCED BY 50 PERCENT.
9. ON AND OFF-SITE MATERIAL STORAGE AREAS SHALL BE PROPERLY PROTECTED AND MANAGED.
10. THE CONTRACTOR SHALL PROPOSE A STOCKPILE LOCATION TO BE COORDINATED WITH THE ENGINEER. THE STOCKPILES SHALL BE STABILIZED OR COVERED AT THE END OF EACH WORKDAY. STOCKPILE SIDE SLOPES SHALL NOT BE GREATER THAN 2:1. ALL STOCKPILES SHALL BE SURROUNDED BY SEDIMENT CONTROLS.

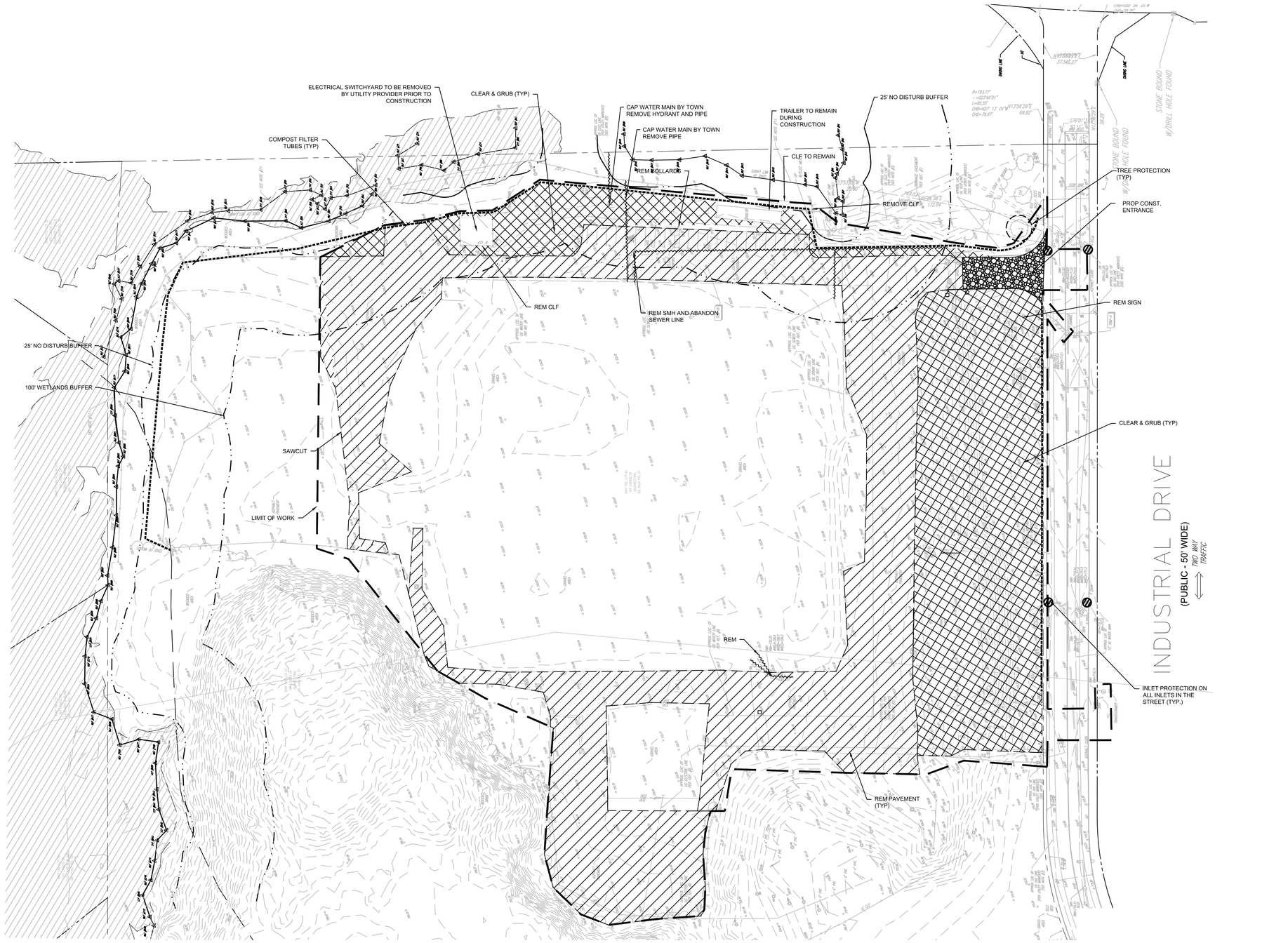

Project:
TOWN OF HOLDEN, MA

DEPARTMENT OF PUBLIC WORKS

18 INDUSTRIAL DRIVE
HOLDEN, MA

Weston & Sampson

Weston & Sampson Engineers, Inc.
100 Foxborough Boulevard Suite 250
Foxborough, MA 02035
(508) 698-3034 (800) SAMPSON
www.westonandsampson.com

Consultants:

Seal:
COMMONWEALTH OF MASSACHUSETTS
LAURENCE F. KEEGAN, JR.
CIVIL
NO. 33708
REGISTERED PROFESSIONAL ENGINEER
2-13-20

Revisions:

Rev	Date	Description

Issued For: PERMITTING

FOR PERMIT ONLY
NOT FOR CONSTRUCTION

SCALE: AS NOTED

Date:	JANUARY 13, 2020
Drawn By:	EC
Reviewed By:	EC
Approved By:	LFK
W&S Project No:	2150412

Drawing Title:

SITE PREPARATION AND SOIL EROSION AND SEDIMENT CONTROL PLAN

Sheet Number:

C201

NOTES:

1. EXISTING SITE CONDITIONS SHOWN ARE FROM GROUND SURVEYS CONDUCTED BY CONTROL POINT ASSOCIATES, INC. ON AUGUST AND SEPTEMBER 2017.
2. HORIZONTAL DATUM IS NAD83, THE VERTICAL DATUM IS NAVD88.
3. THE WETLANDS DELINEATION LINE WAS PLACED IN THE FIELD BY ECOTEC,INC ON JULY 20, 2017, AND FIELD LOCATED BY CONTROL POINT ASSOCIATES, INC. ON AUGUST 24, 2017.

LEGEND:

- HMA PAVEMENT
- CONCRETE
- 100 YEAR FLOOD INUNDTION EXTENTS PER W&S FLOOD STUDY
- SECONDARY PROTECTION ZONE (MEDIUM AQUIFER PER MassGIS)
- ZONE A

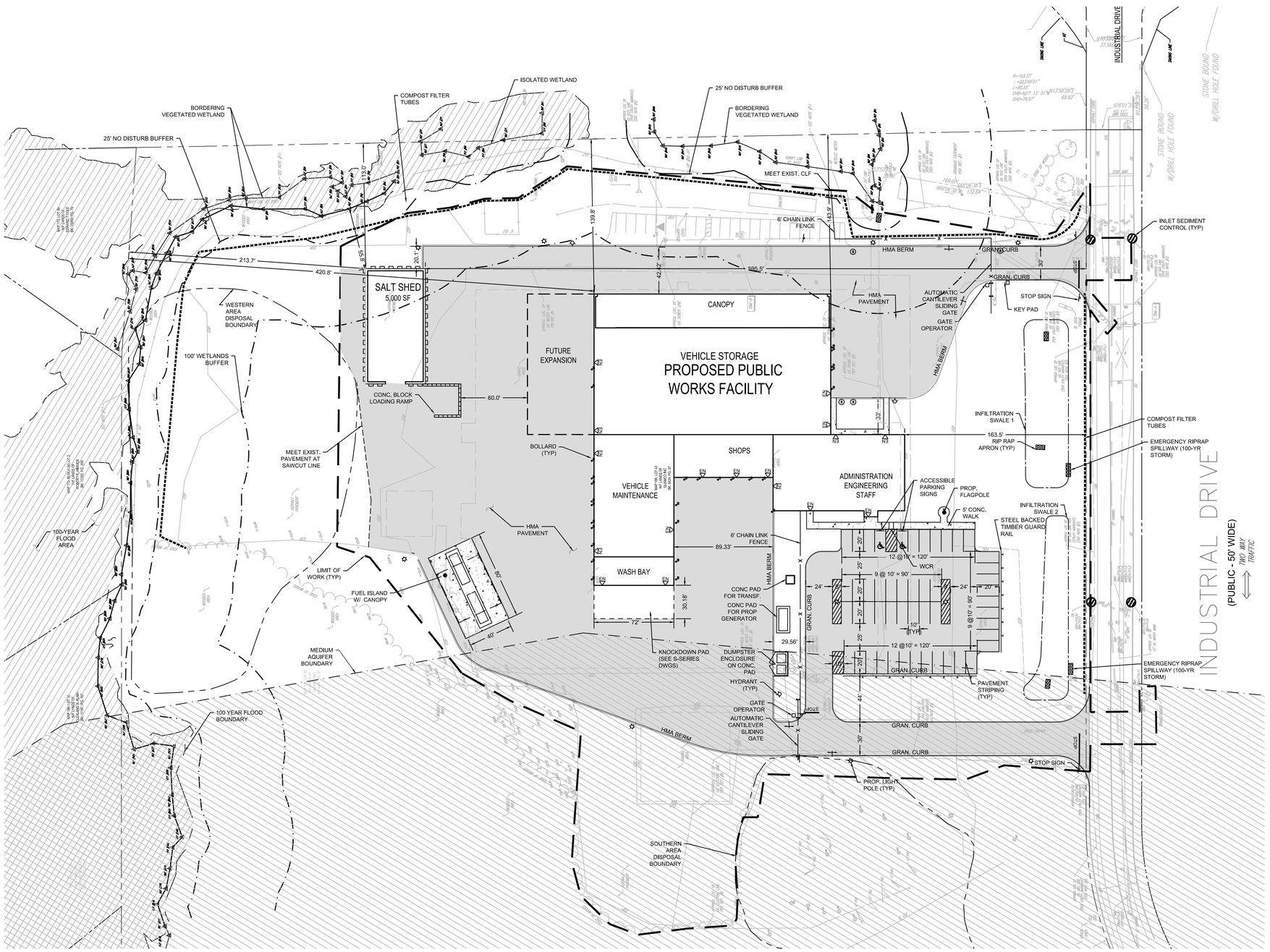

Project:
TOWN OF HOLDEN, MA

DEPARTMENT OF PUBLIC WORKS

18 INDUSTRIAL DRIVE
HOLDEN, MA

Weston & Sampson

Weston & Sampson Engineers, Inc.
100 Foxborough Boulevard Suite 250
Foxborough, MA 02035
(508) 698-3034 (800) SAMPSON
www.westonandsampson.com

Consultants:

Seal:
COMMONWEALTH OF MASSACHUSETTS
LAURENCE F. KEEGAN, JR.
Civil
NO. 33708
REGISTERED PROFESSIONAL ENGINEER
2-13-20

Revisions:

Rev	Date	Description

Issued For: PERMITTING

FOR PERMIT ONLY
NOT FOR CONSTRUCTION

SCALE: AS NOTED

Date:	JANUARY 13, 2020
Drawn By:	EC
Reviewed By:	EC
Approved By:	LFK
W&S Project No:	2150412

Drawing Title:

LAYOUT AND MATERIALS PLAN

Sheet Number:

C301

NOTES:

1. THE LOCATIONS OF EXISTING UNDERGROUND UTILITIES ARE SHOWN IN AN APPROXIMATE WAY ONLY AND HAVE NOT BEEN INDEPENDENTLY VERIFIED BY THE OWNER OR ITS REPRESENTATIVE. THE G.C. SHALL DETERMINE THE EXACT LOCATION OF ALL EXISTING UTILITIES BEFORE COMMENCING WORK, AND AGREES TO BE FULLY RESPONSIBLE FOR ANY AND ALL DAMAGES WHICH MIGHT BE OCCASIONED BY THE G.C. FAILURE TO EXACTLY LOCATE AND PRESERVE ANY AND ALL UNDERGROUND UTILITIES. WHERE AN EXISTING UTILITY IS FOUND TO CONFLICT WITH THE PROPOSED WORK, THE LOCATION, ELEVATION AND SIZE OF THE UTILITY SHALL BE ACCURATELY DETERMINED WITHOUT DELAY BY THE G.C. AND THE INFORMATION FURNISHED TO THE ENGINEER FOR RESOLUTION OF THE CONFLICT.
2. THE G.C. SHALL MAKE ALL ARRANGEMENTS FOR THE ALTERATION AND ADJUSTMENT OF GAS, ELECTRIC, TELEPHONE AND ANY OTHER PRIVATE UTILITIES BY THE UTILITY OWNER.
3. THE G.C. IS RESPONSIBLE FOR ADJUSTING HORIZONTAL AND VERTICAL ALIGNMENT OF PROPOSED UTILITIES AS REQUIRED TO COMPLETE THE PROPOSED DRAINAGE WORK.
4. THE G.C. TO PROVIDE ALL NECESSARY FITTINGS TO ACHIEVE WATER SERVICE LAYOUT AS SHOWN ON THE DRAWINGS.
5. GENERAL CONTRACTOR (G.C) IS RESPONSIBLE FOR PROVIDING PROPER TRANSITION MATERIAL AND FITTINGS TO PROVIDE A TIGHT TRANSITION FROM DISSIMILAR PIPE MATERIALS FROM PLUMBING & FIRE PROTECTION WORK.
6. P.C. IS RESPONSIBLE FOR THE CONSTRUCTION OF THE DOMESTIC WATER LINES & SANITARY SERVICES INSIDE THE BUILDING AND EXTENDING 10' FROM THE FACE OF THE BUILDING UNLESS OTHERWISE NOTED. THE G.C. IS RESPONSIBLE FOR EXTENDING NEW SERVICE INTO THE SITE. PLUMBING CONTRACTOR TO MAKE CONNECTION TO SERVICE INSTALLED BY G.C.
7. P.C. SHALL PROVIDE & INSTALL THE OIL/WATER/SAND SEPARATOR. P.C SHALL PROVIDE & INSTALL ALL SANITARY AND VENT PIPING FROM THE BUILDING TO THE STRUCTURE. G.C. SHALL EXCAVATE & BACKFILL FOR ALL EXTERIOR PIPING AND OIL/WATER SEPARATOR.
8. G.C. IS RESPONSIBLE FOR EXCAVATION, BACKFILL, CONCRETE ENCASEMENT, AND REINFORCEMENT FOR ALL UNDERGROUND CONDUITS/DUCTBANKS, HANDHOLES, PLUMBING, AND FIRE PROTECTION WORK WITHIN THE LIMITS OF THE PROPOSED BUILDING AND ON THE SITE. COORDINATE LIMITS OF WORK WITH FP, P, AND E DRAWINGS FOR WORK NOT SHOWN ON THIS DRAWING.
9. REFER TO E-SERIES DRAWINGS FOR ADDITIONAL UNDERGROUND CONDUIT NOT SHOWN. G.C. SHALL EXCAVATE & BACKFILL FOR ALL CONDUITS AND DUCT BANKS.
10. G.C. SHALL BE RESPONSIBLE FOR THE EXCAVATION, SAND PIPE BEDDING, AND BACKFILL OF THE GAS LINE.
11. ALL UNDERGROUND WORK SHALL BE COORDINATED WITH THE FINAL PLANTING PLAN TO AVOID PLANTINGS FROM BEING INSTALLED OVER NEW UTILITIES.
12. CONTRACTOR TO REMOVE MJ PLUG AND CONNECT WATER LINE TO WATER SERVICE (INSTALLED BY TOWN).

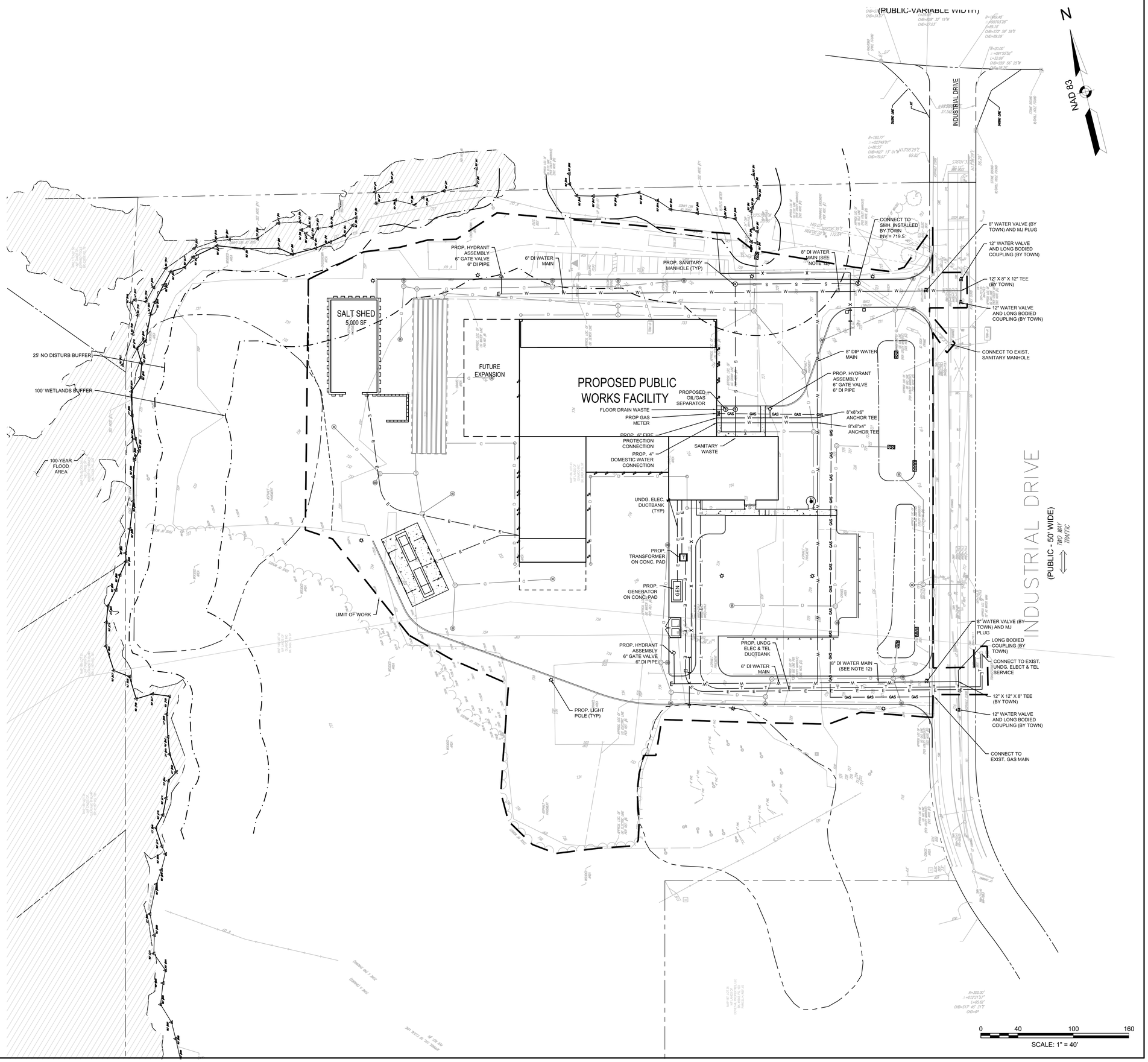

Project:
TOWN OF HOLDEN, MA

DEPARTMENT OF PUBLIC WORKS

18 INDUSTRIAL DRIVE
HOLDEN, MA

Weston & Sampson

Weston & Sampson Engineers, Inc.
100 Foxborough Boulevard Suite 250
Foxborough, MA 02035
(508) 698-3034 (800) SAMPSON
www.westonandsampson.com

Consultants:

Seal:
COMMONWEALTH OF MASSACHUSETTS
LAURENCE F. KEEGAN, JR.
CIVIL
NO. 33708
PROFESSIONAL ENGINEER
2-13-20

Revisions:

Rev	Date	Description

Issued For: PERMITTING

FOR PERMIT ONLY
NOT FOR CONSTRUCTION

SCALE: AS NOTED

Date:	JANUARY 13, 2020
Drawn By:	EC
Reviewed By:	EC
Approved By:	LFK
W&S Project No:	2150412

Drawing Title:

UTILITY PLAN

Sheet Number:

C401

PIPE TABLE			
PIPE	SIZE & TYPE	LENGTH	SLOPE
P-1	12" HDPE	68 LF	0.005
P-2	12" HDPE	67 LF	0.005
P-3	12" HDPE	142 LF	0.005
P-4	12" HDPE	9 LF	0.026
P-5	12" HDPE	5 LF	0.000
P-6	18" HDPE	184 LF	0.010
P-7	12" HDPE	2 LF	0.005
P-8	12" HDPE	3 LF	0.005
P-9	12" HDPE	63 LF	0.005
P-10	12" HDPE	102 LF	0.005
P-11	12" HDPE	81 LF	0.005
P-12	12" HDPE	40 LF	0.005
P-13	12" HDPE	20 LF	0.015
P-14	12" HDPE	67 LF	0.005
P-15	12" HDPE	35 LF	0.005

PIPE TABLE			
PIPE	SIZE & TYPE	LENGTH	SLOPE
P-16	12" HDPE	43 LF	0.005
P-17	12" HDPE	7 LF	0.005
P-18	12" HDPE	54 LF	0.005
P-19	12" HDPE	11 LF	0.005
P-20	12" HDPE	2 LF	0.005
P-21	12" HDPE	35 LF	0.005
P-22	12" HDPE	123 LF	0.015
P-23	12" HDPE	30 LF	0.005
P-24	12" HDPE	98 LF	0.024
P-25	12" HDPE	16 LF	0.005
P-26	12" HDPE	128 LF	0.039
P-27	12" HDPE	5 LF	0.011
P-28	12" HDPE	21 LF	0.009
P-29	12" HDPE	6 LF	0.005
P-30	12" HDPE	24 LF	0.005

PIPE TABLE			
PIPE	SIZE & TYPE	LENGTH	SLOPE
P-31	12" HDPE	4 LF	0.082
P-32	12" HDPE	8 LF	0.005
P-33	12" HDPE	3 LF	0.117
P-34	12" HDPE	108 LF	0.005
P-35	12" HDPE	169 LF	0.010
P-36	12" HDPE	52 LF	0.082
P-37	12" HDPE	14 LF	0.062
P-38	12" HDPE	82 LF	0.031
P-39	12" HDPE	42 LF	0.010
P-40	12" HDPE	35 LF	0.005
P-41	12" HDPE	16 LF	0.005
P-42	12" HDPE	94 LF	0.010
P-43	12" HDPE	104 LF	0.005
P-44	12" HDPE	34 LF	0.005
P-45	12" HDPE	137 LF	0.005

PIPE TABLE			
PIPE	SIZE & TYPE	LENGTH	SLOPE
P-46	12" HDPE	81 LF	0.005
P-47	12" HDPE	62 LF	0.005
P-48	12" HDPE	82 LF	0.005
P-49	24" HDPE	53 LF	0.005
P-50	12" HDPE	103 LF	0.025
P-51	12" HDPE	131 LF	0.005
P-52	12" HDPE	76 LF	0.008
P-53	12" HDPE	36 LF	0.014
P-54	12" HDPE	90 LF	0.005
P-55	12" HDPE	41 LF	0.010
P-56	12" HDPE	8 LF	0.006
P-57	12" HDPE	100 LF	0.044
P-58	12" HDPE	105 LF	0.031
P-59	12" HDPE	6 LF	0.005
P-60	18" HDPE	143 LF	0.010

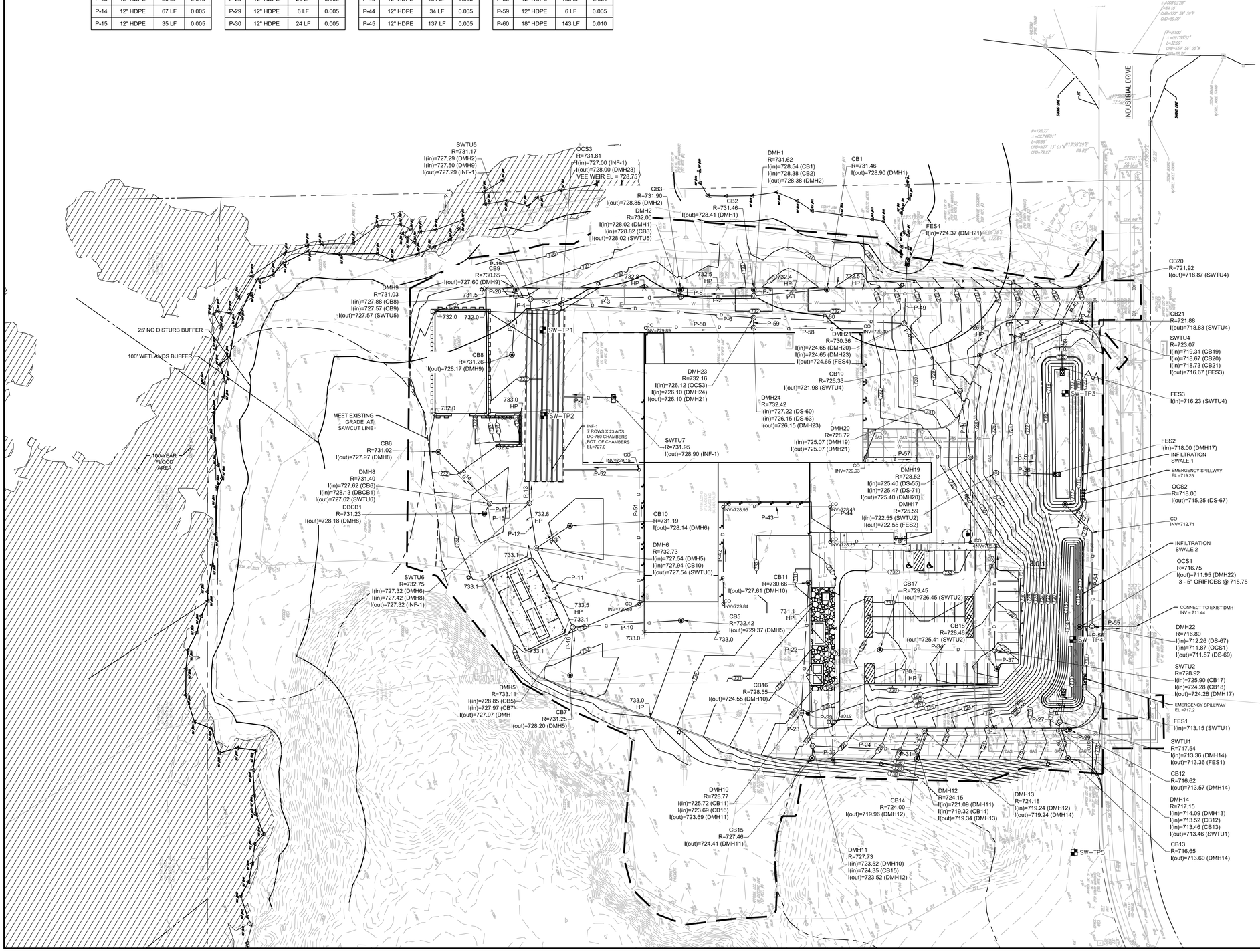

NOTES:

1. ON-SITE EXCAVATION MATERIAL MAY BE USED FOR BACKFILL OUTSIDE PAVEMENT LIMITS ONLY IF IT MEETS THE REQUIREMENTS FOR BACKFILL PER EARTHWORKS SPECIFICATION SECTION.
2. UNLESS OTHERWISE NOTED ALL DRAIN PIPES SHALL BE 12" HDPE (HIGH DENSITY POLYETHYLENE).
3. UNLESS OTHERWISE NOTED, ALL DRAIN MANHOLES SHALL BE 4' INSIDE DIAMETER.
4. ALL RIM ELEVATIONS SHALL BE FLUSH WITH FINISH GRADE.
5. DUMPSTER PAD SHALL SLOPE AT A MINIMUM 2% INTO THE PAVED AREA.
6. EROSION CONTROL FABRIC "A" SHALL BE USED FOR ALL SLOPES 3:1 OR STEEPER.
7. FOR THE PROPOSED ROOF DRAIN LINES, THE CONTRACTOR SHALL INSTALL CLEAN OUTS AT THE END OF THE PIPE LINE, AT ANY LOCATION WHERE THE PIPE CHANGES DIRECTIONS, AND AT A 100 FOOT INTERVALS AS NEEDED. CLEANOUTS LOCATED IN PAVED AREAS SHALL BE INSTALLED TO PROVIDE H-20 WHEEL LOADING RATING. G.C. SHALL BE RESPONSIBLE FOR EXCAVATION & BACKFILL FOR ALL ROOF DRAIN PIPING INSTALLED BY THE PLUMBING CONTRACTOR.
8. THE LOCATIONS OF EXISTING UNDERGROUND UTILITIES ARE SHOWN IN AN APPROXIMATE WAY ONLY AND HAVE NOT BEEN INDEPENDENTLY VERIFIED BY THE OWNER OR ITS REPRESENTATIVE. THE CONTRACTOR SHALL DETERMINE THE EXACT LOCATION OF ALL EXISTING UTILITIES BEFORE COMMENCING WORK, AND AGREES TO BE FULLY RESPONSIBLE FOR ANY AND ALL DAMAGES WHICH MIGHT BE OCCASIONED BY THE CONTRACTOR'S FAILURE TO EXACTLY LOCATE AND PRESERVE ANY AND ALL UNDERGROUND UTILITIES. WHERE AN EXISTING UTILITY IS FOUND TO CONFLICT WITH THE PROPOSED WORK, THE LOCATION, ELEVATION AND SIZE OF THE UTILITY SHALL BE ACCURATELY DETERMINED WITHOUT DELAY BY THE CONTRACTOR AND THE INFORMATION FURNISHED TO THE ENGINEER FOR RESOLUTION OF THE CONFLICT.
9. THE CONTRACTOR SHALL INSTALL SILT SACKS ON ALL PROPOSED INLETS FOR THE DURATION OF CONSTRUCTION AND INSPECT THE CATCH BASINS AFTER EACH RAIN EVENT. THE SEDIMENT FROM SEDIMENT TRAPS SHALL BE REMOVED WHEN DESIGN CAPACITY HAS BEEN REDUCED BY 50 PERCENT. SILT SACKS SHALL BE REMOVED ONCE THE SITE IS PERMANENTLY STABILIZED AT THE END OF CONSTRUCTION.

Project:
TOWN OF HOLDEN, MA

DEPARTMENT OF PUBLIC WORKS

18 INDUSTRIAL DRIVE
HOLDEN, MA

Weston & Sampson

Weston & Sampson Engineers, Inc.
100 Foxborough Boulevard Suite 250
Foxborough, MA 02035
(508) 698-3034 (800) SAMPSON
www.westonandsampson.com

Consultants:

Seal:
COMMONWEALTH OF MASSACHUSETTS
LAURENCE J. KEEGAN, JR.
CIVIL
NO. 33708
REGISTERED PROFESSIONAL ENGINEER
2-13-20

Revisions:

Rev	Date	Description

Issued For: PERMITTING

FOR PERMIT ONLY
NOT FOR CONSTRUCTION

SCALE: AS NOTED

Date:	JANUARY 13, 2020
Drawn By:	EC
Reviewed By:	EC
Approved By:	LFK
W&S Project No:	2150412

Drawing Title:

GRADING AND DRAINAGE PLAN

Sheet Number:

C501

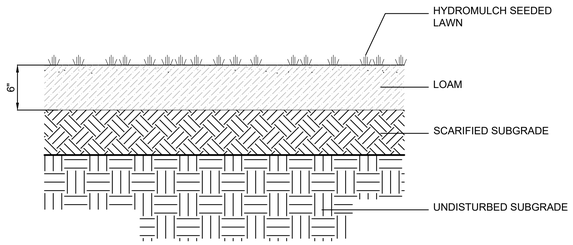

1 LOAM & SEED
SCALE: N.T.S.

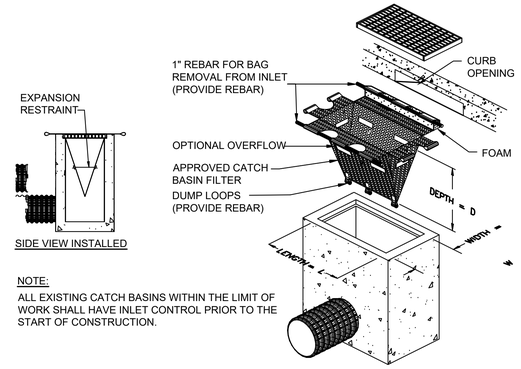

NOTE:
ALL EXISTING CATCH BASINS WITHIN THE LIMIT OF WORK SHALL HAVE INLET CONTROL PRIOR TO THE START OF CONSTRUCTION.

2 INLET SEDIMENT CONTROL
SCALE: N.T.S.

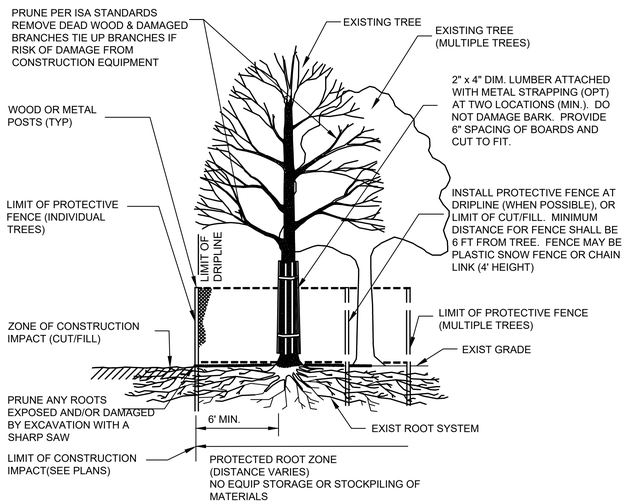

3 EXISTING TREE PROTECTION
SCALE: N.T.S.

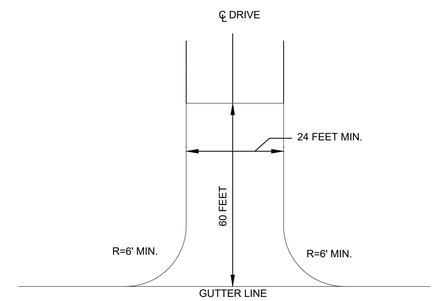

PLAN

NOTES:

1. AT LEAST ONE CONSTRUCTION ENTRANCE SHALL BE PLACED AT EACH OF THE SITE, THROUGHOUT CONSTRUCTION.
2. THE LOCATION OF THE CONSTRUCTION ENTRANCE(S) SHALL BE APPROVED BY THE OWNER PRIOR TO PLACEMENT.
3. CONSTRUCTION ENTRANCE(S) SHALL CONSIST OF 2" CRUSHED STONE PLACED AT A DEPTH OF A MINIMUM 8 INCHES PLACED OVER GEOTEXTILE FABRIC.
4. CONTRACTOR IS RESPONSIBLE FOR CLEARING OF ALL VEGETATION, ROOTS AND ALL OBSTRUCTIONS IN PREPARATION FOR GRADING AND COMPACTING PRIOR TO PLACEMENT OF GEOTEXTILE FABRIC AND CRUSHED STONE.
5. CONTRACTOR IS RESPONSIBLE FOR DAILY INSPECTION AND ALL NECESSARY MAINTENANCE OF ALL ENTRANCES.
6. CONTRACTOR IS RESPONSIBLE FOR REMOVAL OF SEDIMENTS OR ANY OTHER MATERIALS TRACKED ONTO THE STREET, AS WELL MAINTENANCE OF EROSION CONTROL MEASURES.

4 STABILIZED TEMPORARY CONSTRUCTION ENTRANCE
SCALE: N.T.S.

GENERAL NOTES:

1. PROVIDE A MINIMUM TUBE DIAMETER OF 12 INCHES FOR SLOPES UP TO 50 FEET IN LENGTH WITH A SLOPE RATIO OF 3H:1V OR STEEPER. LONGER SLOPES OF 3H:1V MAY REQUIRE LARGER TUBE DIAMETER OR ADDITIONAL COURSING OF FILTER TUBES TO CREATE A FILTER BERM. REFER TO MANUFACTURER'S RECOMMENDATIONS FOR SITUATIONS WITH LONGER OR STEEPER SLOPES.
2. INSTALL TUBES ALONG CONTOURS AND PERPENDICULAR TO SHEET OR CONCENTRATED FLOW.
3. DO NOT INSTALL IN PERENNIAL, EPHEMERAL OR INTERMITTENT STREAMS.
4. CONFIGURE TUBES AROUND EXISTING SITE FEATURES TO MINIMIZE SITE DISTURBANCE AND MAXIMIZE CAPTURE AREA OF STORMWATER RUN-OFF.
5. MULCH MATERIAL FOR THE FILTER TUBES SHALL BE WEED-FREE STRAW, WOOD EXCELSIOR, COMPOST, OR WOOD CHIPS, OR COIR. STRAW SHALL BE WEED FREE AND DERIVED FROM THRESHING OF GRAIN CROP.
6. CURVE ENDS UPHILL TO PREVENT DIVERSION OF UNFILTERED RUN-OFF.

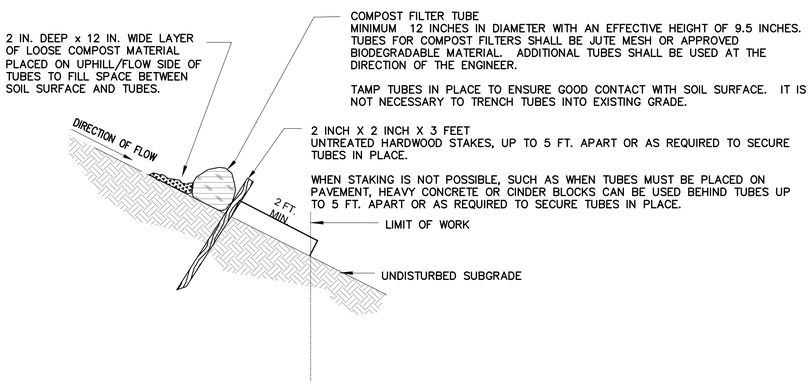

PROVIDE A 3 FT. MINIMUM OVERLAP AT ENDS OF TUBES TO JOIN IN A CONTINUOUS BARRIER AND MINIMIZE UNIMPEDED FLOW.
STAKE JOINING TUBES SNUGLY AGAINST EACH OTHER TO PREVENT UNFILTERED FLOW BETWEEN THEM.

SECURE ENDS OF TUBES WITH STAKES SPACED 18 IN. APART THROUGH TOPS OF TUBES.

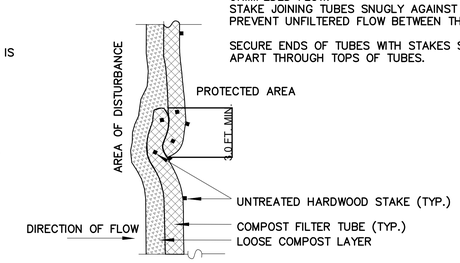

PLAN VIEW – JOINING DETAIL

5 SINGLE COMPOST FILTER TUBE DETAIL
SCALE: N.T.S.

Project:
TOWN OF HOLDEN, MA

DEPARTMENT OF PUBLIC WORKS

18 INDUSTRIAL DRIVE
HOLDEN, MA

Weston & Sampson Engineers, Inc.
100 Foxborough Boulevard Suite 250
Foxborough, MA 02035
(508) 698-3034 (800) SAMPSON
www.westonandsampson.com

Consultants:

Seal:
COMMONWEALTH OF MASSACHUSETTS
LAURENCE F. KEEGAN, JR.
CIVIL
NO. 33708
REGISTERED PROFESSIONAL ENGINEER
2-13-20

Revisions:

Rev	Date	Description

Issued For: PERMITTING

FOR PERMIT ONLY
NOT FOR CONSTRUCTION

SCALE: AS NOTED

Date:	JANUARY 13, 2020
Drawn By:	EC
Reviewed By:	EC
Approved By:	LFK
W&S Project No:	2150412

Drawing Title:

DETAILS

Sheet Number:

C601

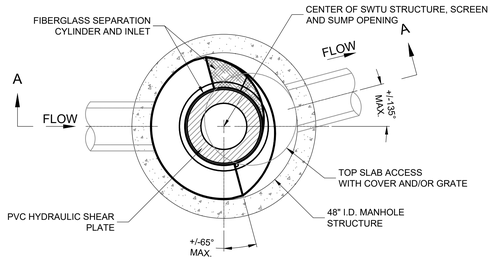

PLAN VIEW B-B
N.T.S.

NOTES:

1. DIMENSIONS MARKED WITH () ARE REFERENCE DIMENSIONS. ACTUAL DIMENSIONS MAY VARY.
2. WATER QUALITY STRUCTURE SHALL BE IN ACCORDANCE WITH ALL DESIGN DATA AND INFORMATION CONTAINED IN THE SPECIFICATIONS.
3. STRUCTURE SHALL MEET AASHTO HS20 AND CASTINGS SHALL MEET AASHTO M306 LOAD RATING.
4. CONTRACTOR TO PROVIDE EQUIPMENT WITH SUFFICIENT LIFTING AND REACH CAPACITY TO LIFT AND SET THE SWTU MANHOLE STRUCTURE.
5. CONTRACTOR TO ADD JOINT SEALANT BETWEEN ALL STRUCTURE SECTIONS, AND ASSEMBLE STRUCTURE.
6. CONTRACTOR TO TAKE APPROPRIATE MEASURES TO ASSURE UNIT IS WATER TIGHT, HOLDING WATER TO FLOWLINE INVERT MINIMUM. IT IS SUGGESTED THAT ALL JOINTS BELOW PIPE INVERTS BE GROUTED.
7. CONTRACTOR TO PROVIDE, INSTALL, AND GROUT PIPES. SEE SHEET C501 FOR LOCATION, MATERIAL AND INVERT DATA.

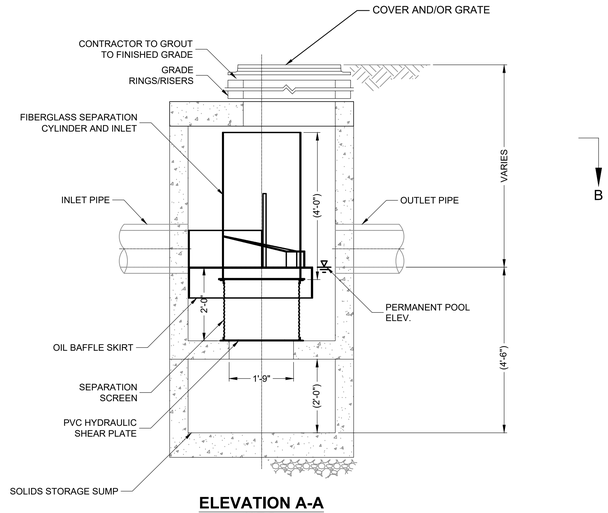

ELEVATION A-A
N.T.S.

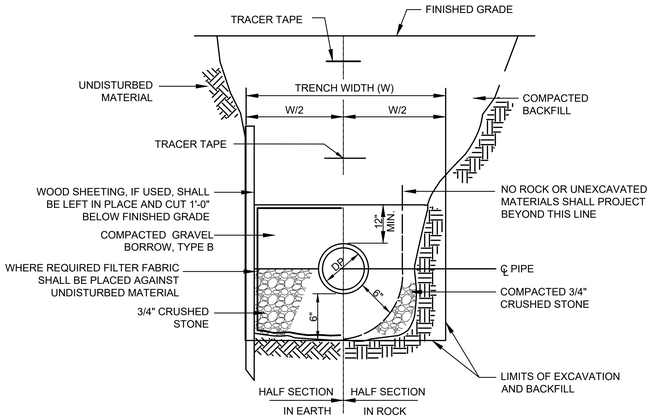

DEPTH TO INVERT	DIAMETER OF PIPE (DP)	MAX. TRENCH WIDTH BELOW LINE OF NARROW TRENCH LIMIT (SHEETED OR UNSHEETED) (W)
0-12'	TO 4"	5'-0"

1 STORMWATER TREATMENT UNIT (SWTU)
SCALE: N.T.S.

2 SEWER TRENCH DETAIL
SCALE: N.T.S.

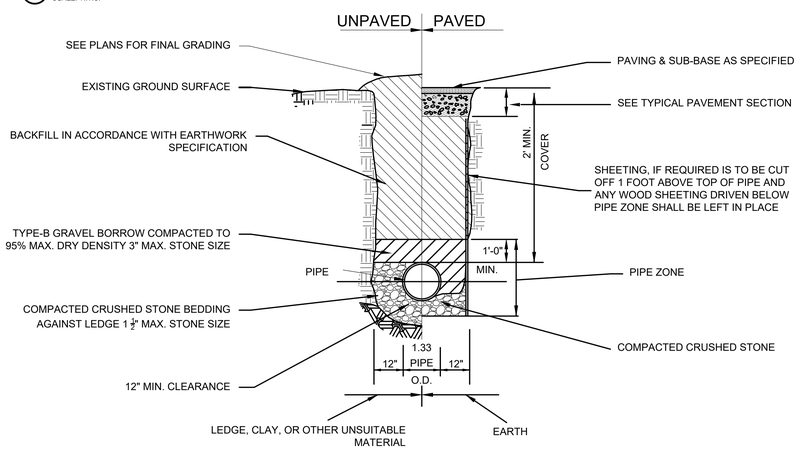

3 TYPICAL H.D.P.E DRAIN TRENCH DETAIL
SCALE: N.T.S.

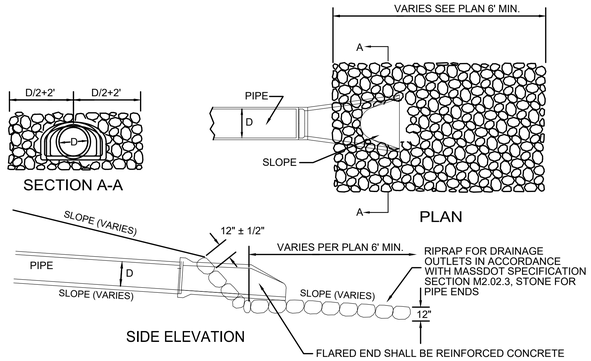

4 FLARED END PIPE DETAIL
SCALE: N.T.S.

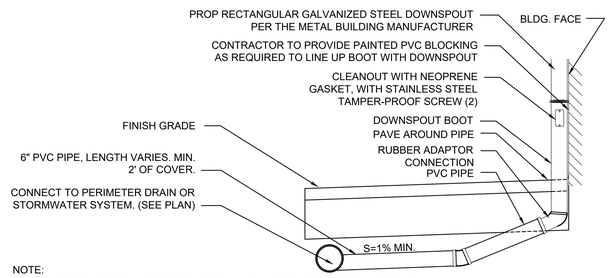

NOTE:

1. DOWNSPOUT DETAIL IS TYPICAL FOR ALL BUILDING GUTTER DOWNSPOUTS.
2. REFER TO ARCHITECTURAL PLANS FOR EXACT QUANTITY & LOCATION.
3. COORDINATE WITH CIVIL SITE PLANS FOR CONNECTIONS TO STORM SYSTEM.
4. PROVIDE A DOWNSPOUT BOOT AT EACH DOWNSPOUT TO ALLOW THE RECTANGULAR DOWNSPOUT TO TRANSITION TO THE ROUND CAST IRON RECEPTOR PIPE.
5. PAINT DOWNSPOUT ADAPTER BY PAINTING SUBCONTRACTOR. COLOR AS SELECTED BY THE ENGINEER.
6. DOWNSPOUT ADAPTER SHALL BE MANUFACTURED BY J.R. HOE AND SONS, NEENAH FOUNDRY, PIEDMONT MANUFACTURING OR APPROVED EQUAL.

5 GUTTER DOWNSPOUT CONNECTION DETAIL (EXTERNAL)
SCALE: N.T.S.

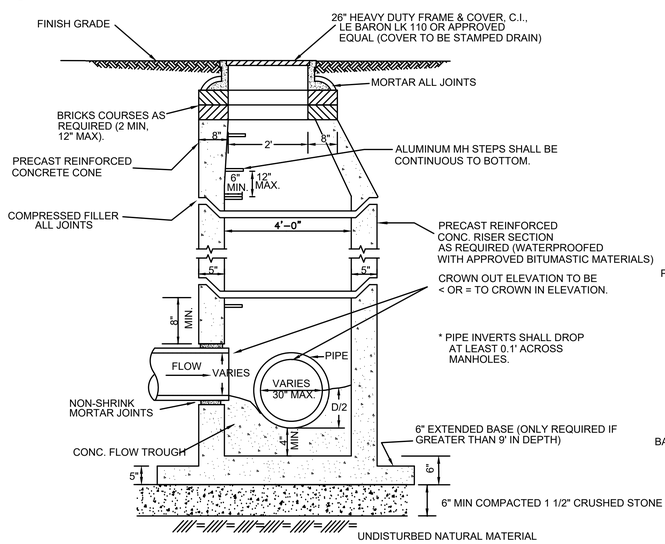

NOTE:

1. IN DRAINAGE MANHOLES PIPE OPENINGS SHALL BE GROUTED WITH NON-SHRINK MORTAR JOINTS. FOR SANITARY MANHOLES PIPE OPENINGS SHALL USE KOR-N-SEAL OR APPROVED EQUAL EPDM RUBBER SEAL WITH STAINLESS STEEL BAND AND CLAMPS

6 TYPICAL PRECAST CONCRETE DRAIN/SEWER MANHOLE
SCALE: N.T.S.

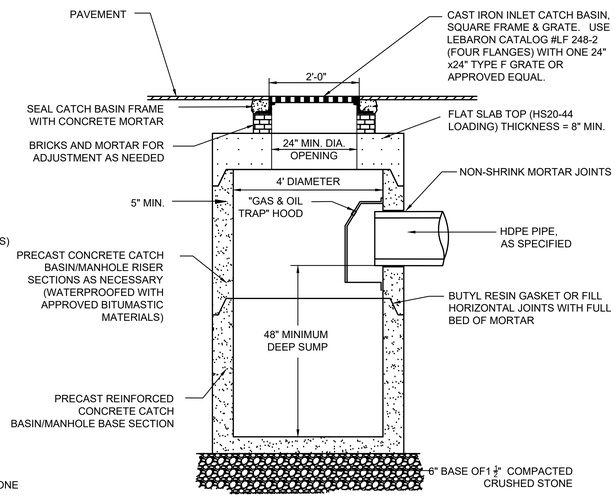

NOTE: FOR DOUBLE CATCH BASINS, STRUCTURE SHALL BE 6' IN DIAMETER.

7 STANDARD CATCH BASIN
SCALE: N.T.S.

NOTES:

1. G.C. IS RESPONSIBLE FOR EXCAVATION, CONCRETE ENCASEMENT, REINFORCEMENT AND BACKFILL. ELECTRICAL CONTRACTOR IS RESPONSIBLE FOR PROVIDING AND INSTALLING THE CONDUITS & SPACERS.
2. PROVIDE REINFORCEMENT PER LOCAL UTILITY COMPANY REQUIREMENTS. REFER TO E501 FOR DETAILS.
3. QUANTITY & SIZE OF CONDUITS VARY. DUCTBANK SIZE SHALL BE ADJUSTED BASED ON CONDUIT TYPES & SIZES IDENTIFIED ON THE E-SERIES DRAWINGS.
4. CONTRACTOR SHALL COORDINATE DEPTH OF PROPOSED DUCTBANK WITH PROPOSED UTILITY & DRAINAGE SYSTEMS TO AVOID CONFLICTS.
5. BACKFILL AROUND DUCTBANK WITH GRAVEL BORROW BACKFILL MATERIAL.

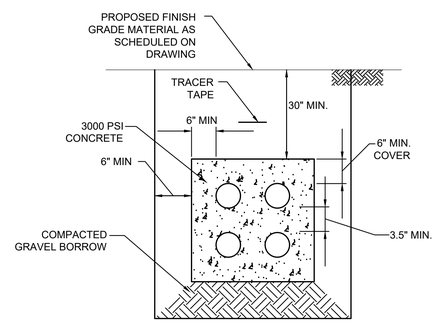

7 ELECTRIC/COMMUNICATION DUCTBANK DETAIL
SCALE: N.T.S.

Project:
TOWN OF HOLDEN, MA

DEPARTMENT OF PUBLIC WORKS
18 INDUSTRIAL DRIVE
HOLDEN, MA

Weston & Sampson
Weston & Sampson Engineers, Inc.
100 Foxborough Boulevard Suite 250
Foxborough, MA 02035
(508) 698-3034 (800) SAMPSON
www.westonandsampson.com

Consultants:

Seal:
COMMONWEALTH OF MASSACHUSETTS
LAURENCE F. KEEGAN, JR.
CIVIL
NO. 33708
REGISTERED PROFESSIONAL ENGINEER
2-13-20

Revisions:

Rev	Date	Description

Issued For: PERMITTING

FOR PERMIT ONLY
NOT FOR CONSTRUCTION

SCALE: AS NOTED

Date:	JANUARY 13, 2020
Drawn By:	EC
Reviewed By:	EC
Approved By:	LFK
W&S Project No:	2150412

Drawing Title:

DETAILS

Sheet Number:

C602

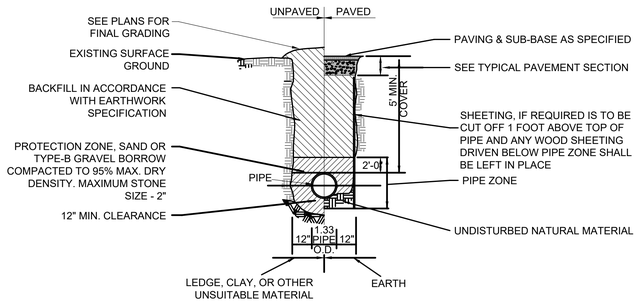

1.GRAVEL BORROW SHALL CONFORM TO MASS HIGHWAY SPECIFICATION M1.030

2.CRUSHED STONE BEDDING SHALL CONFORM TO MASS HIGHWAY SPECIFICATION M2.01.2

1 TYPICAL WATER TRENCH DETAIL
SCALE: N.T.S.

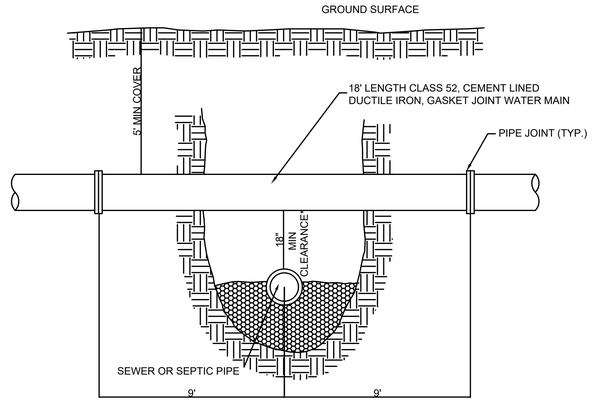

*WHEN THE CROSSING AS SHOWN IS LESS THAN 18" VERTICAL CLEARANCE THE UTILITY BEING INSTALLED MUST BE SLEEVED 10' ON BOTH SIDES OF THE CROSSING WITH SDR35 PVC PIPE. IF THE SEWER MAIN OR SERVICE CROSSES ABOVE THE WATER MAIN OR SERVICE, AGAIN THE UTILITY BEING INSTALLED MUST BE SLEEVED 10' ON BOTH SIDES OF THE CROSSING WITH SDR35 PVC PIPE.

2 TYPICAL WATER CROSSING
SCALE: N.T.S.

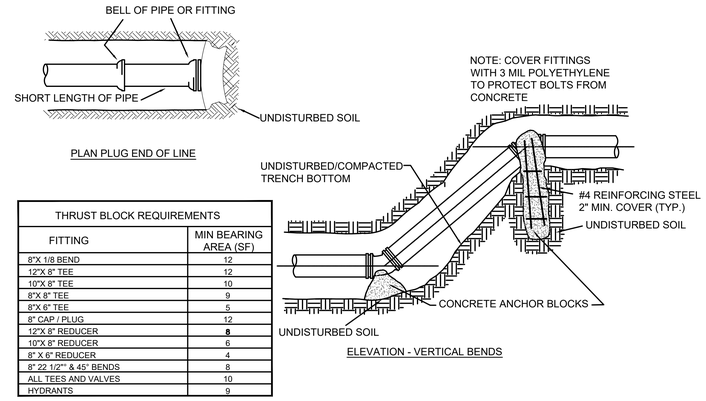

THRUST BLOCK REQUIREMENTS	
FITTING	MIN BEARING AREA (SF)
8"X 1/8 BEND	12
12"X 8" TEE	12
10"X 8" TEE	10
8"X 8" TEE	9
8"X 6" TEE	5
8" CAP / PLUG	12
12"X 8" REDUCER	8
10"X 8" REDUCER	6
8" X 6" REDUCER	4
8" 22 1/2"" & 45° BENDS	8
ALL TEES AND VALVES	10
HYDRANTS	9

3 ANCHORAGE DETAILS
SCALE: N.T.S.

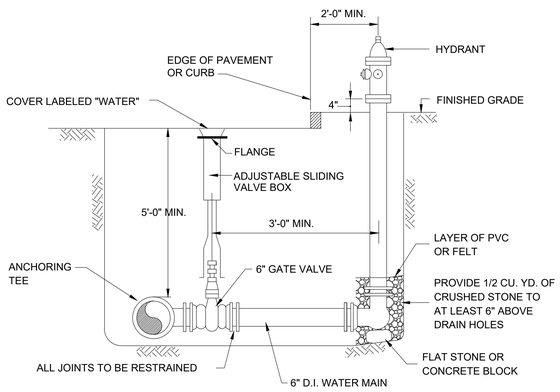

NOTES

1. HYDRANT GATE VALVE TO BE LOCATED WITHIN ROADWAY PAVEMENT WHERE POSSIBLE.
2. GATES VALVES SHALL BE AWWA RESILIENT SEAT GATE VALVES.
3. USE TWO 6" BENDS OR OFFSET ON LATERAL TO ACHIEVE REQUIRED HYDRANT ELEVATION IF NECESSARY.

4 HYDRANT AND VALVE DETAIL
SCALE: N.T.S.

NOTES:

1. GATE VALVE TO BE LOCATED WITHIN ROADWAY PAVEMENT WHERE POSSIBLE
2. PROPER SIZE VALVE BOX SHALL BE INSTALLED WHERE GATE VALVES ARE SHOWN ON PLANS

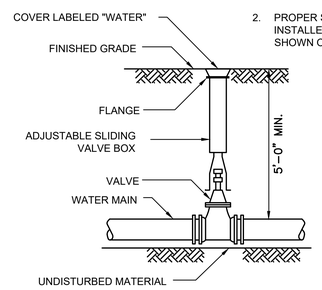

5 VALVE AND BOX DETAIL
SCALE: N.T.S.

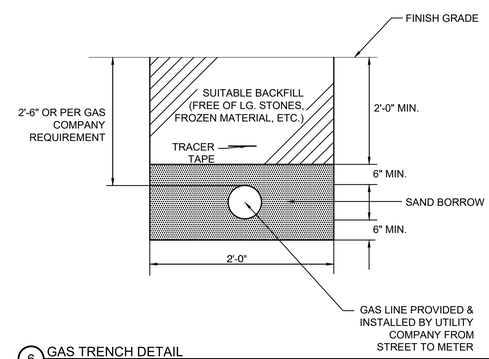

6 GAS TRENCH DETAIL
SCALE: N.T.S.

Project:
TOWN OF HOLDEN, MA

DEPARTMENT OF PUBLIC WORKS

18 INDUSTRIAL DRIVE
HOLDEN, MA

Weston & Sampson Engineers, Inc.
100 Foxborough Boulevard Suite 250
Foxborough, MA 02035
(508) 698-3034 (800) SAMPSON
www.westonandsampson.com

Consultants:

Seal:
COMMONWEALTH OF MASSACHUSETTS
LAURENCE F. KEEGAN, JR.
CIVIL
NO. 33708
REGISTERED PROFESSIONAL ENGINEER
2-13-20

Revisions:

Rev	Date	Description

Issued For: PERMITTING

FOR PERMIT ONLY
NOT FOR CONSTRUCTION

SCALE: AS NOTED

Date: JANUARY 13, 2020
Drawn By: EC
Reviewed By: EC
Approved By: LFK
W&S Project No: 2150412

Drawing Title:
DETAILS

Sheet Number:
C603

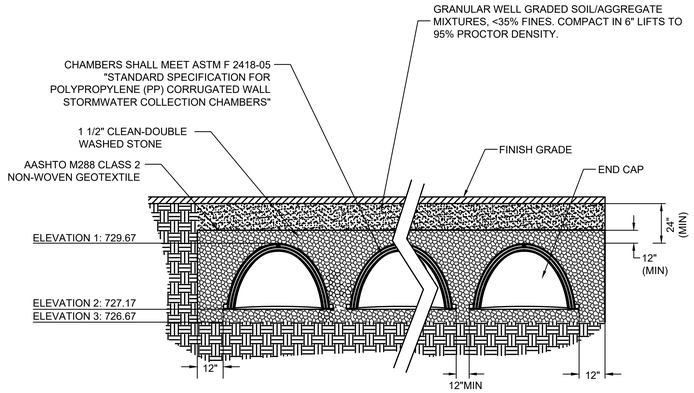

1 INFILTRATION/RECHARGE CHAMBER - SECTION
SCALE: N.T.S.

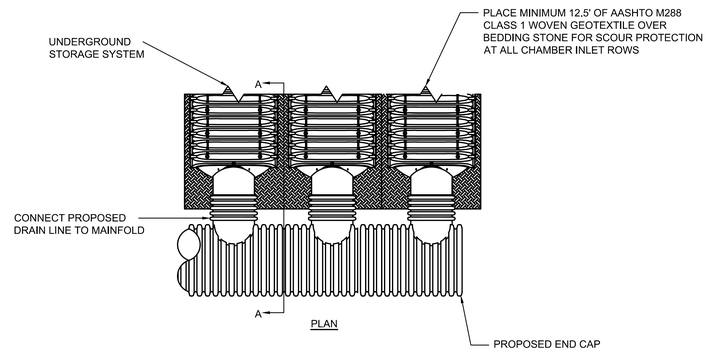

2 INFILTRATION/RECHARGE CHAMBER - MANIFOLD CONNECTION
SCALE: N.T.S.

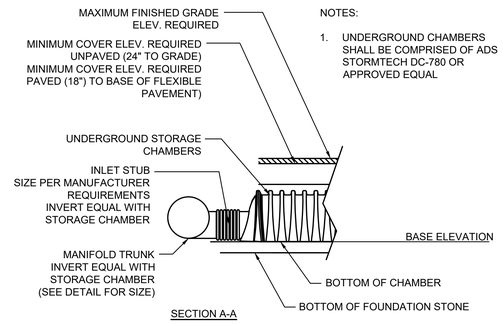

NOTES:

1. UNDERGROUND CHAMBERS SHALL BE COMPRISED OF ADS STORMTECH DC-780 OR APPROVED EQUAL

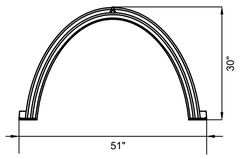

3 CHAMBER UNIT DETAIL
SCALE: N.T.S.

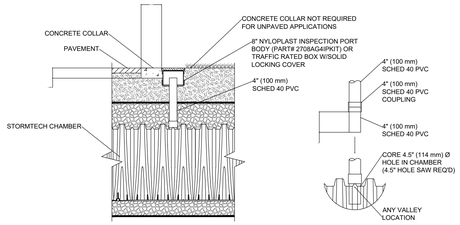

NOTES:

1. INSPECTION PORTS MAY BE CONNECTED THROUGH ANY CHAMBER CORRUGATION VALLEY.
2. ALL SCHEDULE 40 FITTINGS TO BE SOLVENT CEMENTED (4" PVC NOT PROVIDED BY ADS).

4 4" PVC INSPECTION PORT DETAIL
SCALE: N.T.S.

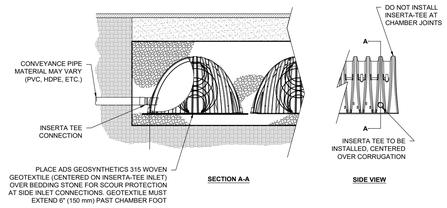

NOTE:
PART NUMBERS WILL VARY BASED ON INLET PIPE MATERIALS.
CONTACT STORMTECH FOR MORE INFORMATION.

5 INSERTA TEE DETAIL
SCALE: N.T.S.

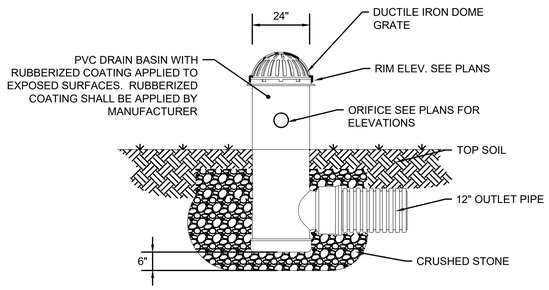

6 OUTLET CONTROL STRUCTURE (INFILTRATION SWALES)
SCALE: N.T.S.

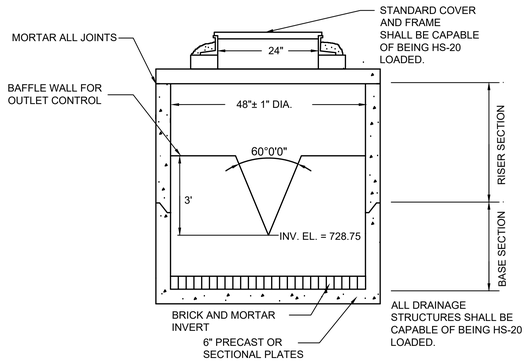

7 OUTLET CONTROL STRUCTURE (OCS-3)
SCALE: N.T.S.

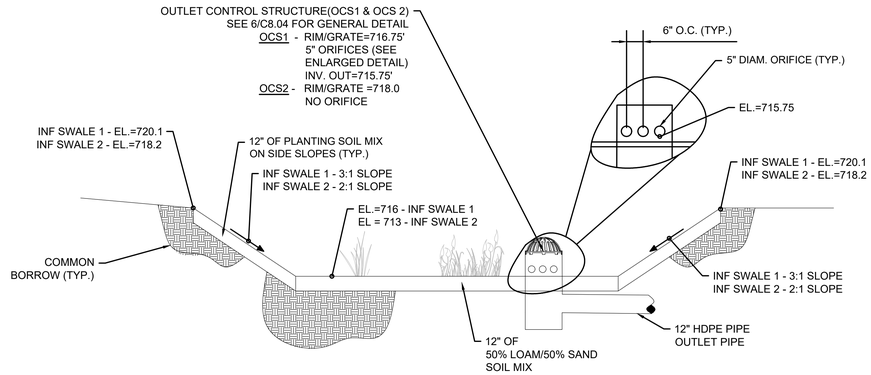

NOTES:

1. CROSS SECTION IS SCHEMATIC ONLY AND IS MEANT (SEE GRADING AND DRAINAGE PLAN FOR DIMENSIONS AND ELEVATIONS)

8 INFILTRATION SWALE - TYPICAL SCHEMATIC SECTION
SCALE: N.T.S.

Project:
TOWN OF HOLDEN, MA

DEPARTMENT OF PUBLIC WORKS

18 INDUSTRIAL DRIVE
HOLDEN, MA

Weston & Sampson
Weston & Sampson Engineers, Inc.
100 Foxborough Boulevard Suite 250
Foxborough, MA 02035
(508) 698-3034 (800) SAMPSON
www.westonandsampson.com

Consultants:

Seal:
COMMONWEALTH OF MASSACHUSETTS
LAURENCE F. KEEGAN, JR.
CIVIL
NO. 33708
REGISTERED PROFESSIONAL ENGINEER
2-13-20

Revisions:

Rev	Date	Description

Issued For: PERMITTING

FOR PERMIT ONLY
NOT FOR CONSTRUCTION

SCALE: AS NOTED

Date:	JANUARY 13, 2020
Drawn By:	EC
Reviewed By:	EC
Approved By:	LFK
W&S Project No:	2150412

Drawing Title:

DETAILS

Sheet Number:

C604

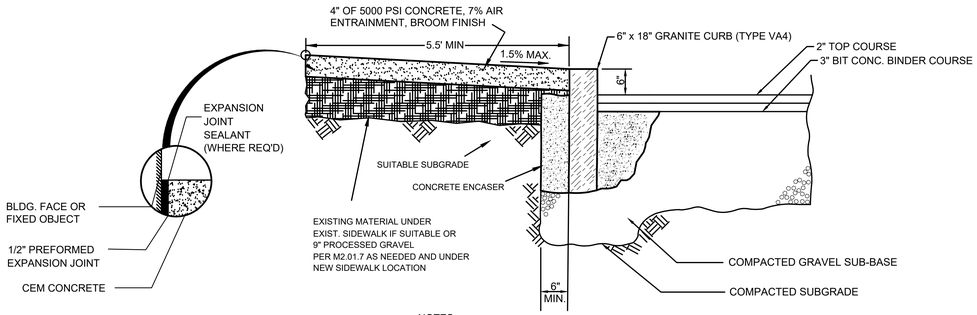

NOTES:

1. PROVIDE PRE MOLDED EXPANSION JOINTS AT MIN. 30' O.C.
2. PROVIDE TOOLED DUMMY JOINTS AT 4' O.C. (MIN. 1" DEPTH)
3. BROOM FINISH PATTERN

1 CONCRETE SIDEWALK & GRANITE CURB DETAIL
SCALE: N.T.S.

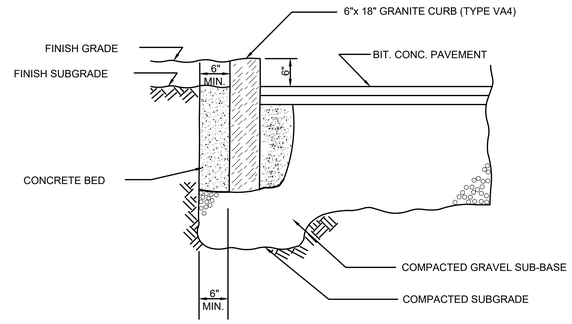

2 GRANITE CURB DETAIL
SCALE: N.T.S.

PAVEMENT NOTES

PROPOSED FULL DEPTH PAVEMENT:

HEAVE DUTY TRAFFIC AREAS:	2" SURFACE COURSE 4" BINDER COURSE 12" GRAVEL
LIGHT DUTY TRAFFIC AREAS:	1.5" SURFACE COURSE 2" BINDER COURSE 10" GRAVEL

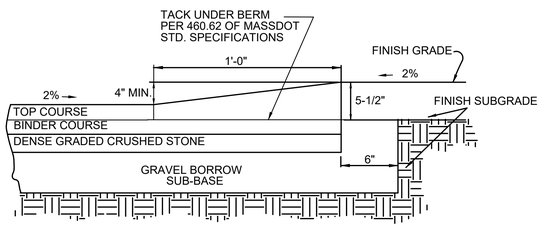

3 HMA CROSS SECTION AND HMA BERM
SCALE: N.T.S.

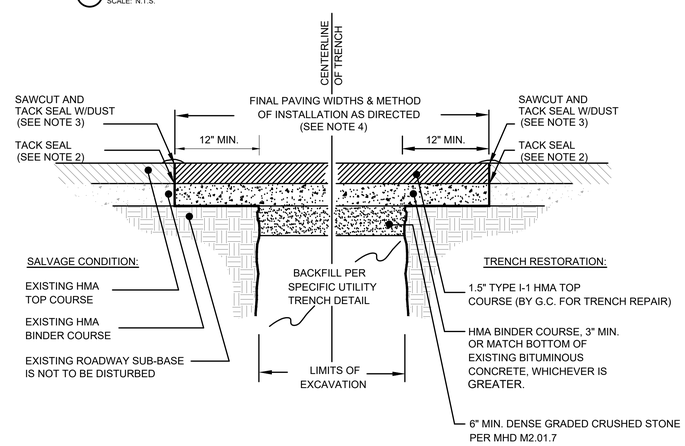

1. ALL INSTALLATION AND MATERIAL SPECIFICATIONS PER MASS. HIGHWAY DEPARTMENT STANDARD SPECIFICATIONS FOR HIGHWAYS AND BRIDGES, 1988 AS AMENDED.
2. ALL EXPOSED HMA IS TO BE TACKED PER MHD PRIOR TO NEW BITUMINOUS CONCRETE INSTALLATION.
3. ALL EXPOSED JOINTS ARE TO BE SEALED WITH TACK AND STONE DUST.
4. ANY TOP COURSE APPLIED AT A WIDTH OF 6' WIDE OR GREATER IS TO BE PLACED BY MACHINE/BOX SPREADER WHEN & AS DIRECTED BY THE TOWN

4 TYPICAL TRENCH REPAIR & PAVEMENT SECTION DETAIL
SCALE: N.T.S.

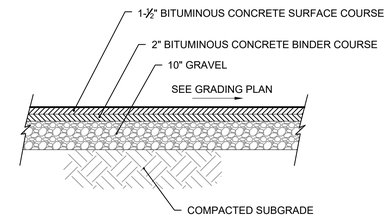

SECTION FOR LIGHT DUTY TRAFFIC

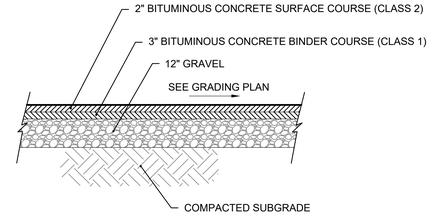

SECTION FOR HEAVY DUTY TRAFFIC

5 TYPICAL PAVING CROSS SECTION DETAIL
SCALE: N.T.S.

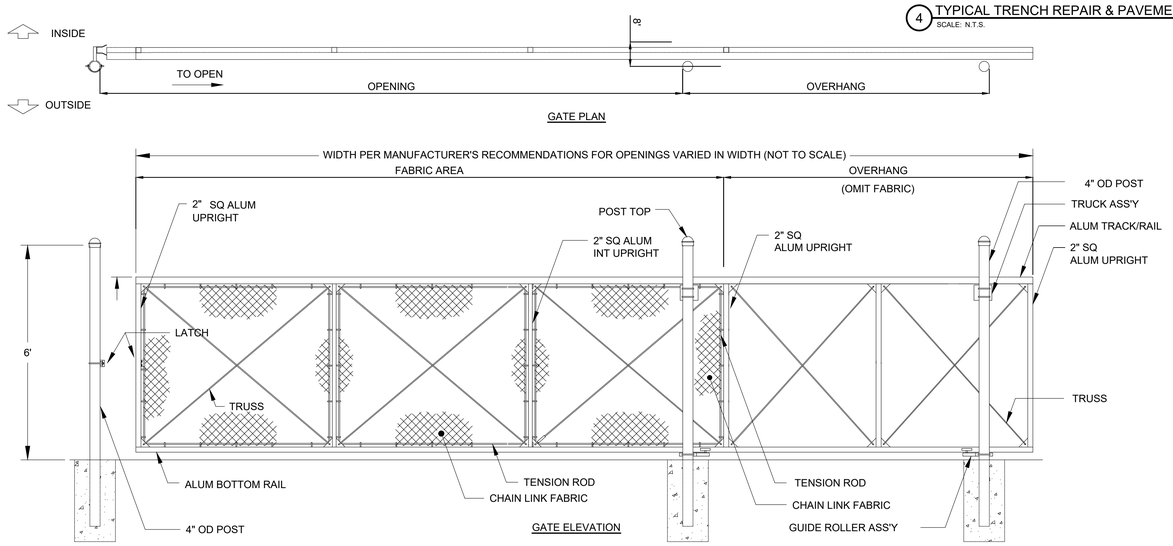

NOTES:

1. CONCRETE FOOTING SIZE SHALL BE DESIGNED BY MANUFACTURER.
2. GATE OPENING WIDTHS SHALL BE AS SHOWN ON PLANS.

6 SINGLE CANTILEVERED SLIDING GATE DETAIL (BLACK VINYL)
SCALE: N.T.S.

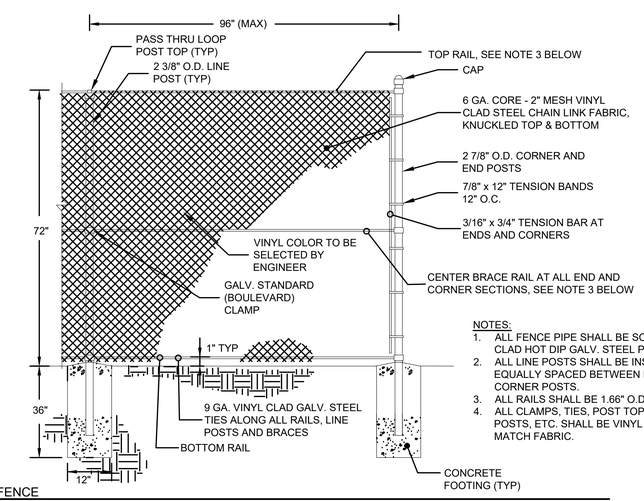

NOTES:

1. ALL FENCE PIPE SHALL BE SCH. 40, VINYL CLAD HOT DIP GALV. STEEL PIPE.
2. ALL LINE POSTS SHALL BE INSTALLED EQUALLY SPACED BETWEEN END & CORNER POSTS.
3. ALL RAILS SHALL BE 1.66" O.D. PIPE
4. ALL CLAMPS, TIES, POST TOPS, BANDS, POSTS, ETC. SHALL BE VINYL CLAD TO MATCH FABRIC.

7 CHAIN LINK FENCE
SCALE: N.T.S.

Project:
TOWN OF HOLDEN, MA

DEPARTMENT OF PUBLIC WORKS

18 INDUSTRIAL DRIVE
HOLDEN, MA

Weston & Sampson Engineers, Inc.
100 Foxborough Boulevard Suite 250
Foxborough, MA 02035
(508) 698-3034 (800) SAMPSON
www.westonandsampson.com

Consultants:

Seal:

Revisions:

Rev	Date	Description

Issued For: PERMITTING

FOR PERMIT ONLY
NOT FOR CONSTRUCTION

SCALE: AS NOTED

Date:	JANUARY 13, 2020
Drawn By:	EC
Reviewed By:	EC
Approved By:	LFK
W&S Project No:	2150412

Drawing Title:

DETAILS

Sheet Number:

C605

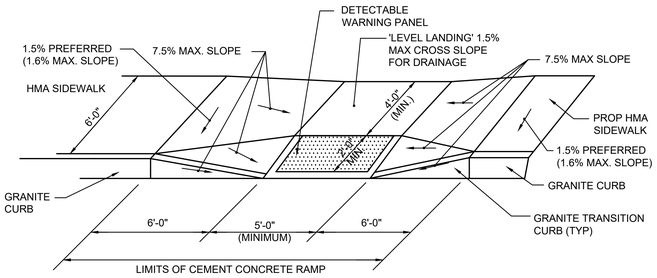

1 WHEELCHAIR RAMP DETAIL
SCALE: N.T.S.

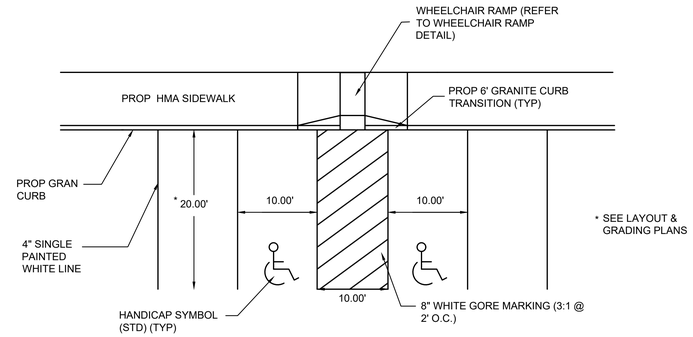

2 PARKING STALLS AND SYMBOLS
SCALE: N.T.S.

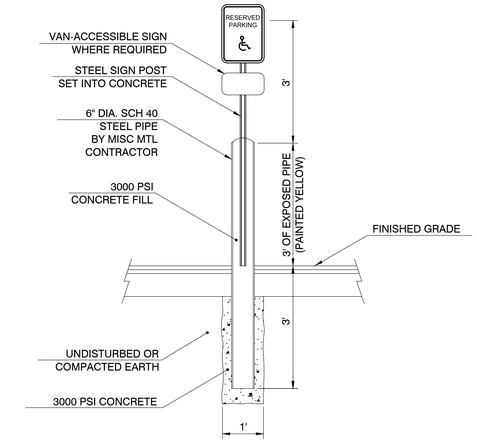

NOTE:
1. LOCATE CENTER OF 6" STEEL PIPE 1' FROM EDGE OF PARKING.
2. ALL SIGNS TO BE CENTERED ON PARKING SPACE.

3 ACCESSIBLE SIGN IN BOLLARD
SCALE: N.T.S.

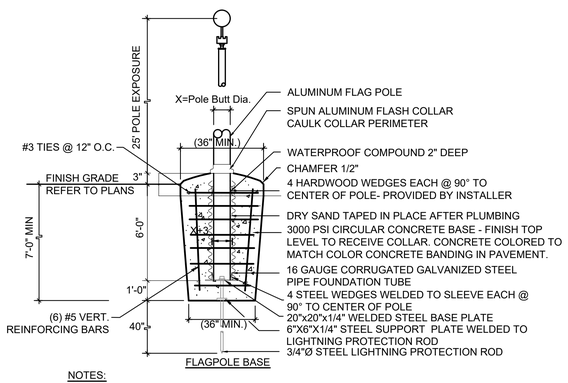

NOTES:

1. FULL EXCAVATION DEPTH EQUALS LENGTH OF FOUNDATION TUBE PLUS. 1'-0".
2. CONFIRM LOCATION OF FLAGPOLE IN FIELD.
3. DETAIL PROVIDED FOR ILLUSTRATION ONLY. CONTRACTOR SHALL SUBMIT ENGINEERED DESIGN TO MEET PROJECT SOIL CONDITIONS.

4 FLAGPOLE DETAIL
SCALE: N.T.S.

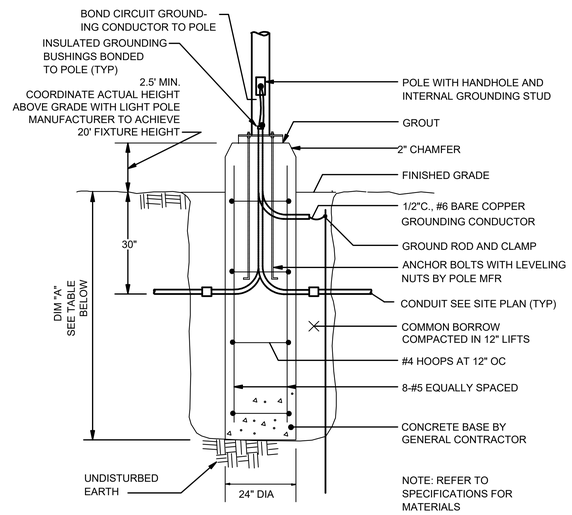

POLE HEIGHT	DIMENSION "A"
10'-0"	4'-6"
20'-0"	4'-6"
30'-0"	6'-6"
40'-0"	6'-6"

NOTE:
ELECTRICAL CONTRACTOR SHALL COORDINATE WITH THE GENERAL CONTRACTOR. ALL EXCAVATION, INSTALLATION OF FOUNDATION AND BACKFILL SHALL BE BY GENERAL CONTRACTOR.

5 LIGHT POLE FOUNDATION DETAIL
SCALE: N.T.S.

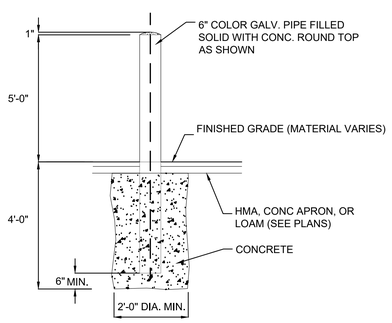

NOTES:

1. SEE C301 SERIES FOR BOLLARD LOCATIONS.
2. BOLLARD FOUNDATION CONCRETE TO BE 3000 PSI MIN.
3. EXACT LOCATION TO BE DETERMINED IN THE FIELD AND APPROVED BY TOWN BEFORE INSTALLATION.
4. 6" FACTORY COLOR-GALVANIZED PIPE BOLLARD FILLED SOLID WITH CONCRETE-ROUND TOP AS SHOWN. METAL FABRICATIONS TO PROVIDE BOLLARD TO BE INSTALLED AND FILLED BY THE GENERAL CONTRACTOR.
5. COLOR TO BE SELCTED BY THE TOWN.

6 STEEL PIPE BOLLARD
SCALE: N.T.S.

IDENTIFI-CATION NUMBER	TEXT	PANEL SIZE					NUMERALS & LETTERS				COLOR COMB.	NUMBER OF SIGNS REQUIRED	TOTAL AREA SQ. FT.	POST SIZE AND NUMBER REQUIRED
		WIDTH	HEIGHT	CORNER RADII	BORDER WIDTH	MARGIN WIDTH	NUM. IN.	UPPER CASE	LOWER CASE	SERIES				
R1-1	STOP	30"	30"	SEE MUTCD, INCLUDING STANDARD HIGHWAY SIGNS, LATEST EDITION							WHITE ON RED	2	12.50	P5-1 1
R7-8	RESERVED PARKING	12"	18"								WHITE ON RED	2	18.00	P5-1 2
											WHITE ON BLUE	2	4.50	P5-1 (2) MOUNTED IN BOLLARD
R5-11	AUTHORIZED VEHICLES ONLY	30"	24"								BLACK ON WHITE	1	5.00	P5-1 2

7 PERMANENT TRAFFIC SIGN SUMMARY
SCALE: N.T.S.

Project:
TOWN OF HOLDEN, MA

DEPARTMENT OF PUBLIC WORKS

18 INDUSTRIAL DRIVE
HOLDEN, MA

Weston & Sampson
Weston & Sampson Engineers, Inc.
100 Foxborough Boulevard Suite 250
Foxborough, MA 02035
(508) 698-3034 (800) SAMPSON
www.westonandsampson.com

Consultants:

Seal:
COMMONWEALTH OF MASSACHUSETTS
LAURENCE F. KEEGAN, JR.
CIVIL
NO. 33708
REGISTERED PROFESSIONAL ENGINEER
2-13-20

Revisions:

Rev	Date	Description

Issued For: PERMITTING

FOR PERMIT ONLY
NOT FOR CONSTRUCTION

SCALE: AS NOTED

Date: JANUARY 13, 2020
Drawn By: EC
Reviewed By: EC
Approved By: LFK
W&S Project No: 2150412

Drawing Title:
DETAILS

Sheet Number:
C606

PLANTING SCHEDULE

TREES

ABRV.	QTY	COMMON NAME	BOTANICAL NAME	SIZE	NOTES
CF	4	PINK FLOWERING DOGWOOD	CORNUS FLORIDA ' Cherokee Princess'	3"-3.5" CAL,B&B	SPACE 15-20' O.C.
GBA	6	'Autumn Gold' MAINDENHAIR TREE	GINKGO BILOBA 'Autumn Gold'	3"-3.5" CAL,B&B	SPACE 40' O.C.
GB	3	'Princeton Sentry' COLUMNAR GINKGO	GINKGO BILOBA 'Princeton Sentry'	3"-3.5" CAL,B&B	SPACE 15' O.C.
PC	4	'Cleveland Select' FLOWERING PEAR	PYRUS CALLERYANA 'Cleveland Select'	3"-3.5" CAL,B&B	SPACE 35' O.C.
PR	3	PITCH PINE	PINUS RIGIDA	7' HEIGHT,B&B	SPACE 15' O.C.

SHRUBS

DS	35	VARIEGATED DWARF BUSH HONEYSUCKLE	DIERVILLA SESSILIFOLIA 'Cool Splash'	#3 CONT., B&B	SPACE 3' O.C.
JC	29	UPRIGHT JUNIPER	JUNIPERUS CHINENSIS 'Fairview'	#3 CONT., B&B	SPACE 6' O.C.
JH	11	GROUNDCOVER JUNIPER	JUNIPERUS HORIZONTALIS 'Hughes'	#3 CONT., B&B	SPACE 5' O.C.
JP	44	SPREADING SEA GREEN JUNIPER	JUNIPERUS PFITZERIANA ' Sea Green'	#3 CONT., B&B	SPACE 6' O.C.
PO	11	TINY WINE NINEBARK	PHYSOCARPUS OBULIFOLIUS 'Tiny Wine'	#3 CONT., B&B	SPACE4' O.C.
SX	9	'Bloomerang Dwarf Pink' REBLOOMING LILAC	SYRINGA X 'Bloomerang Dwarf Pink'	#3 CONT., B&B	SPACE 3-4' O.C.
WS	23	'Sonic Bloom Pink' WEIGELA	WEIGELA FLORIDA 'Sonic Bloom Pink'	#3 CONT., B&B	SPACE 5' O.C.

PERENNIALS

HH	70	DAYLILY	HEMEROCALLIS 'Happy Returns'	#1 CONT., B&B	SPACE 1.5' O.C.
NF	253	'Walkers Low' CATMINT	NEPETA X FAASSENII 'Walkers Low'	#2 CONT., B&B	SPACE 2.5' O.C.
SS	30	Autumn Fire STONECROP	SEDUM SPECTABILE 'Autumn Fire'	#2 CONT., B&B	SPACE 2'+/- O.C.

LEGEND

- LOAM AND SEED. TYP. — 1 / PL200
- NATIVE WETLAND MIX. TYP., SEE SPECIFICATIONS.
- TREE PLANTING, TYP. — 3.5 / PL200
- SHRUB PLANTING, TYP. — 4 / PL200
- PERENNIAL PLANTING — 2 / PL200
- ANNUAL FLOWER PLANTING (by owner)

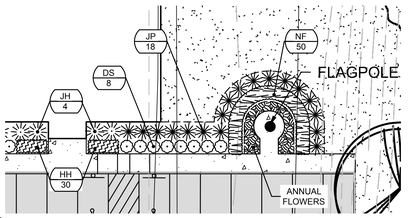

1 Partial Plan - flagpole area
SCALE: bar scale

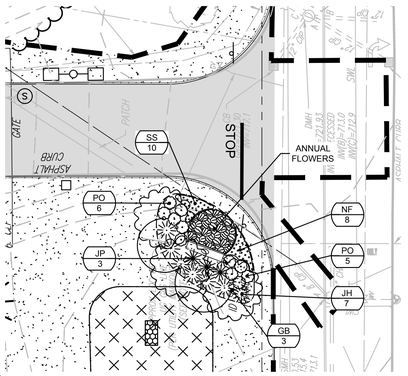

2 Partial Plan - DPW entrance
SCALE: bar scale

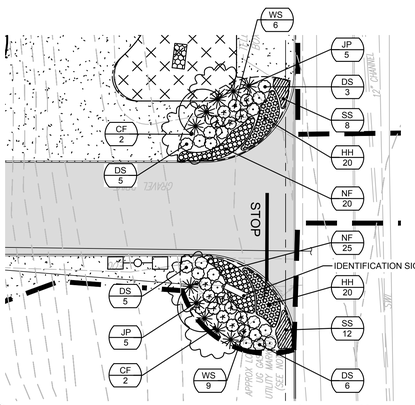

3 Partial Plan - public entrance
SCALE: bar scale

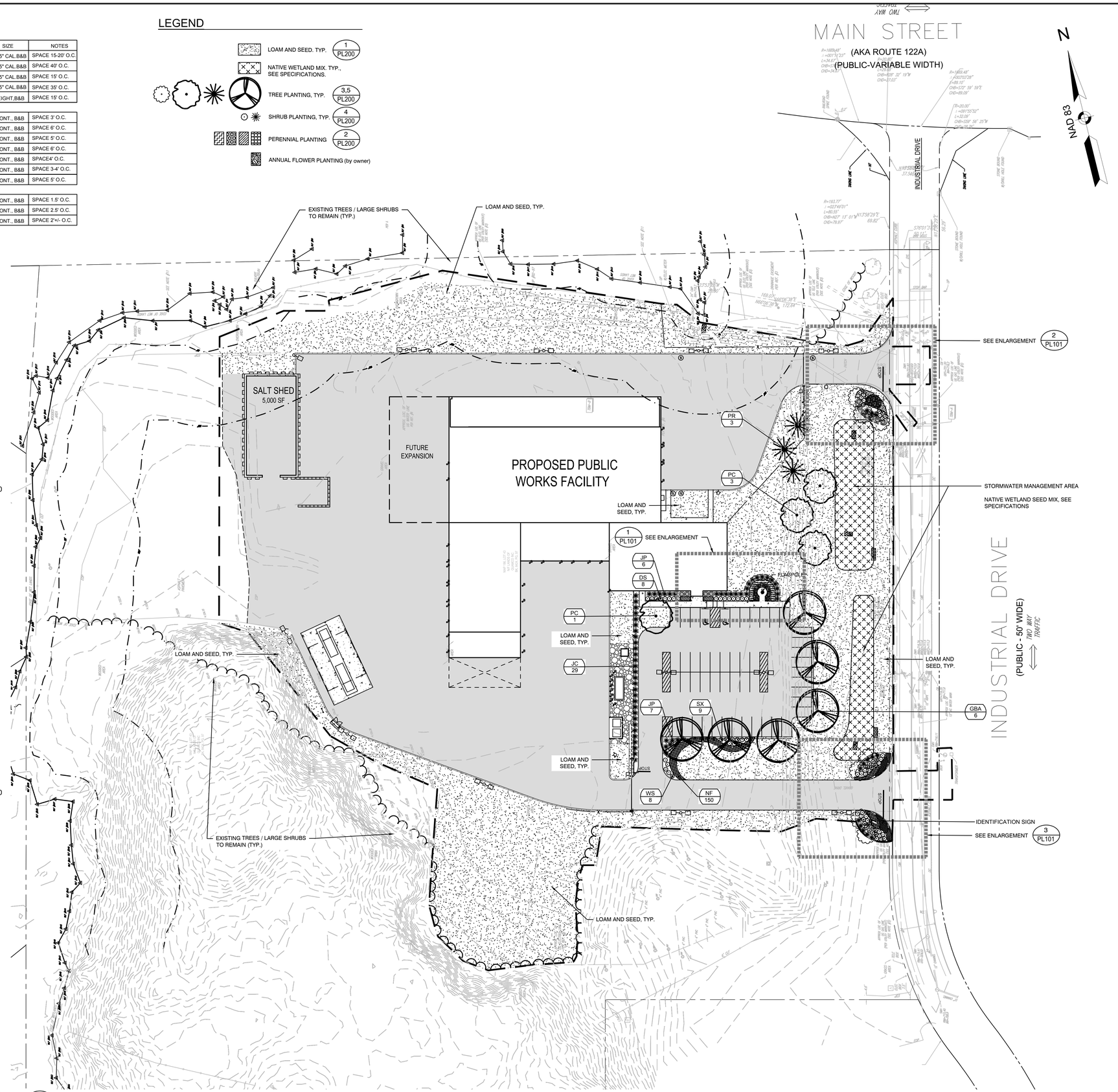

4 SITE PLAN
SCALE: bar scale

0 40 100 160
SCALE: 1" = 40'

Project:
TOWN OF HOLDEN, MA

DEPARTMENT OF PUBLIC WORKS

18 INDUSTRIAL DRIVE
HOLDEN, MA

Weston & Sampson
Weston & Sampson Engineers, Inc.
100 Foxborough Boulevard Suite 250
Foxborough, MA 02035
(508) 698-3034 (800) SAMPSON
www.westonandsampson.com

Consultants:

Seal:

Revisions:

Rev	Date	Description

Issued For: PERMITTING

FOR PERMIT ONLY
NOT FOR CONSTRUCTION

SCALE: AS NOTED

Date:	JANUARY 13, 2020
Drawn By:	EC
Reviewed By:	EC
Approved By:	LFK
W&S Project No:	2150412

Drawing Title:

PLANTING PLAN

Sheet Number:

PL101

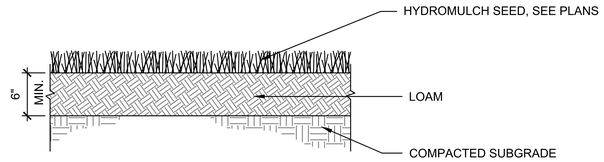

1 LOAM AND SEED, TYP.

SCALE: N.T.S.

HERBACEOUS PERENNIAL SPACING TABLE

PLANT SPACING "A"	PLANT SPACING "B"	PLANTS	AREA UNIT
6" O.C.	5.2"	4.61	1 SQ. FT.
8" O.C.	6.93"	2.6	1 SQ. FT.
10" O.C.	8.66"	1.66	1 SQ. FT.
12" O.C.	10.4"	1.15	1 SQ. FT.

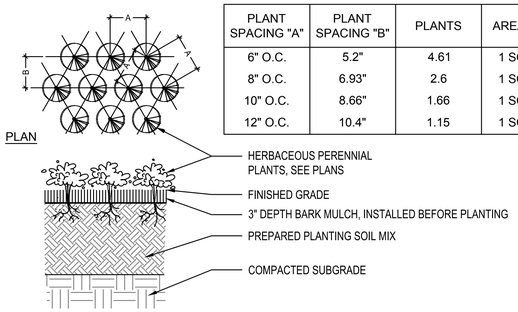

NOTES:

1. ALL HERBACEOUS PERENNIAL TO BE PLANTED IN TRIANGULAR PATTERN. SEE PLANT SCHEDULE FOR SPACING.
2. JUTE EROSION CONTROL MAT TO BE USED ON ALL SLOPES 3:1 OR GREATER.

2 HERBACEOUS PERENNIAL PLANTING, TYP.

SCALE: N.T.S.

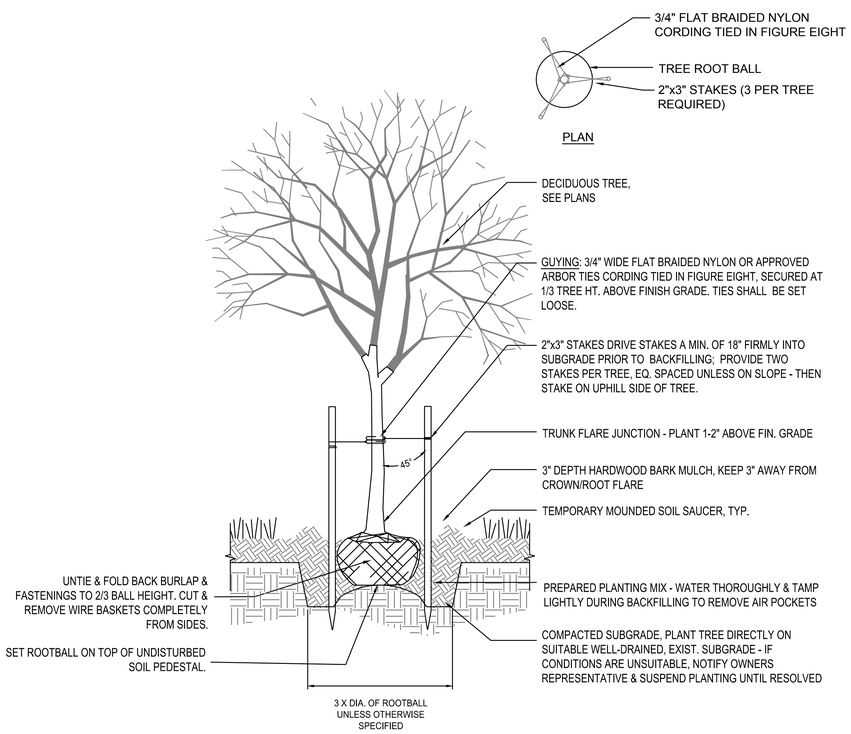

3 DECIDUOUS TREE PLANTING, TYP.

SCALE: N.T.S.

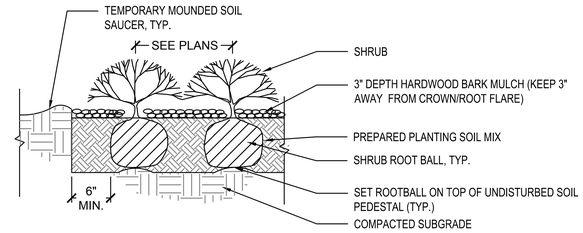

4 SHRUB PLANTING, TYP.

SCALE: N.T.S.

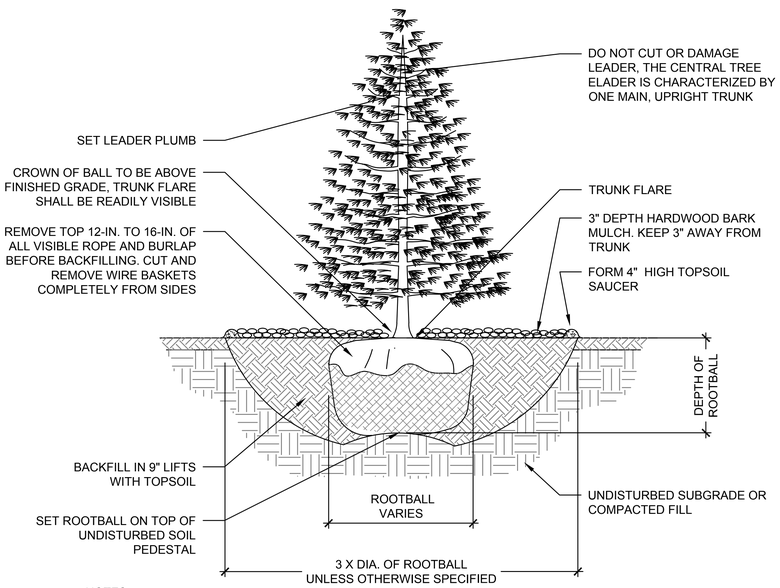

NOTES:

1. IF ROOTBALL IS PACKAGED IN "PLASTIC BURLAP" OR TREATED BURLAP, REMOVE BURLAP COMPLETELY.
2. WATER THOROUGHLY AFTER INSTALLATION AT RATE OF 3-5 GALLONS/INCH CALIPER.

5 EVERGREEN TREE PLANTING, TYP.

SCALE: N.T.S.

Project:
TOWN OF HOLDEN, MA

DEPARTMENT OF PUBLIC WORKS
18 INDUSTRIAL DRIVE
HOLDEN, MA

Weston & Sampson Engineers, Inc.
100 Foxborough Boulevard Suite 250
Foxborough, MA 02035
(508) 698-3034 (800) SAMPSON
www.westonandsampson.com

Consultants:

Seal:

Revisions:

Rev	Date	Description

Issued For: PERMITTING

FOR PERMIT ONLY
NOT FOR CONSTRUCTION

SCALE: AS NOTED

Date:	JANUARY 13, 2020
Drawn By:	EC
Reviewed By:	EC
Approved By:	LFK
W&S Project No:	2150412

Drawing Title:

PLANTING DETAILS

Sheet Number:

PL 200

Applicable Codes

Building	780 CMR – Massachusetts State Building Code 9th Edition, which is an amended version of the 2015 International Building Code (IBC)
Fire	527 CMR - Massachusetts Comprehensive Fire Safety Code, which is an amended version of the 2015 Edition of NFPA 1, Fire Code. The 2015 International Fire Code (IFC) is applicable for fire code references in 780 CMR not addressed by 527 CMR.
Accessibility	521 CMR - Architectural Access Board (AAB) Rules and Regulations 2010 ADA Standards for Accessible Design
Electrical	527 CMR 12.00 - Massachusetts Electrical Code, which is an amended version of the 2017 Edition of NFPA 70, National Electrical Code
Mechanical	2015 International Mechanical Code (IMC) as amended by 780 CMR 28.00.
Plumbing	248 CMR 10.00 – Uniform State Plumbing Code
Energy	2018 International Energy Conservation Code
Other	National Fire Protection Association (NFPA) Standards, as referenced by the above codes, including the following: - 2013 NFPA 10: *Standard for Portable Fire Extinguishers* - 2013 NFPA 13: *Standard for the Installation of Sprinkler Systems* - 2013 NFPA 72: *National Fire Alarm and Signaling Code*

Use and Occupancy Classifications

Primary Occupancies

The building includes the following occupancies listed in the following table.

Description	780 CMR Classification
Office	Group B (Business)
Automobile Repair & Storage / Equipment Maintenance Shops	Group S-1 (Moderate-Hazard Storage)
Storage / MEP / General Shops	Group S-2 (Low-Hazard Storage)

The building is provided with a break room, conference room, and lunch/ training room that are less than 750 ft^2 in floor area. These rooms are classified as Group B in accordance with 780 CMR 303.1.2.

The day to day functions of the building include the use Class IIIB combustible liquids as follows:

- Fixed motor oil, hydraulic fluid, and transmission fluid storage tanks interconnected to a piping system that will serve the vehicle/ equipment maintenance bays.
  (Aggregate tank capacity: 555 gal)
- A fixed waste oil tank interconnected to and exterior pump-out tank.
  (Tank capacity: 280 gal)
- Portable storage tanks that contain anti-freeze and transmission fluid.
  (Aggregate tank capacity: 110 gal)

Class IIIB combustible liquids are subject to the maximum allowable quantities limitations in 780 CMR Table 307.1(1). Since the planned quantity of Class IIIB combustible liquids will be less than 6,600 gallons (most restrictive limit for Type IIIB), a Group H occupancy is not triggered, nor are control areas required.

Accessory Occupancies

The DPW facility is provided with a muster/ training room that is classified as accessory Group A-3 since it is less than 10% of the floor area (780 CMR 508.2.3).

Special Occupancies

The building includes a repair garage, that is subject to the special provisions outlined within 780 CMR 406.8 and IFC 2311. Major requirements include the following:

- Mechanical ventilation system controlled at the entrance to the garage and installed in accordance with 780 CMR 28.00 (780 CMR 406.8.2).
- Automatic sprinkler system installed in accordance with 780 CMR 903.2.9.1 (780 CMR 406.8.6).
- Floor surface constructed of concrete or similar noncombustible and nonabsorbent materials (780 CMR 406.8.3).
- Cleaning of parts are required to be conducted on listed and approved parts-cleaning machines in accordance with IFC Chapter 57 (IFC 2311.2.1).
- Waste oil, motor oil, and other Class IIIB liquids are required to be stored in approved tanks or containers, which are allowed to be stored and dispensed from inside repair garages (IFC 2311.2.2).
- Garage floor drains, where provided, are required to drain in approved oil separators or traps discharging to a sewer in accordance with the IPC. Contents of oil separators, traps and floor drainage systems are required to be collected at sufficiently frequents intervals and removed from the premises to prevent oil from being carried into the sewers (780 CMR 2311.2.3).
- Sources of ignition are not permitted to be located within 18 inches of the floor and are required to comply with IFC Chapters 3 and 33 (IFC 2311.3).
- The aggregate quantity of motor, machine, automotive oil, and other Class IIIB combustible liquids in use and storage is not permitted to exceed 13,200 gallons (780 CMR Table 307.1.1(1))

Construction Type

Building Height and Area

The building will be constructed of Type IIB construction and is subject to the height and area limitations outlined in the following tables for a building with non-separated Group B, S-1, and S-2 occupancies (780 CMR 504 & 506). Height and area limitations for the building is subject to frontage increase as indicated and will be sprinklered throughout as outlined in the Automatic Sprinkler Systems Section (780 CMR 506.3).

Group	Allowable Height	
B	4 Stories	75 Feet
S-1	3 Stories	75 Feet
S-2	4 Stories	75 Feet

Group	Tabular Area	Frontage Increase (100%)	Allowable Footprint Area	Allowable Aggregate Area
B	92,000 ft^2	17,250 ft^2	109,250 ft^2	109,250 ft^2
S-1	70,000 ft^2	13,125 ft^2	83,125 ft^2	83,125 ft^2
S-2	104,000 ft^2	19,500 ft^2	123,500 ft^2	123,500 ft^2

The building is 1-story in height, has a footprint area of 51,421 ft^2 and an aggregate area of 58,862 ft^2 which is within the height and area limitations outlined above.

Mezzanines

The building is designed with an upper Mezzanine Level. Mezzanines are considered to be a portion of the floor below (780 CMR 505.2). Mezzanines are limited in areas to not greater than one-half of the floor area of the space in which they are located in the building (780 CMR 505.2.1 Exception 2). Mezzanines or portions thereof are permitted to be enclosed provided that two exits are provided or if the occupant load of the aggregate area of the enclosed space is not greater than 10 (780 CMR 505.2.3 Exception 1 & Exception 2). Enclosed portions of the space in which the mezzanine is located do not contribute to floor area determined for allowable mezzanine area.

Fire Resistance Rating of Building Elements

The table below indicates the minimum fire-resistance ratings required based on construction type (780 CMR 601).

Building Element	Fire Resistance Rating Type IIB Construction
Primary Structural Frame	0 Hours [1]
Interior Bearing Walls	0 Hours [1]
Exterior Bearing Walls	0 Hours [1]
Exterior Nonbearing Walls	See Nonbearing Exterior Walls & Openings Section
Floor construction and secondary members	0 Hour [1]
Roof construction and secondary members	0 Hour

[1] Not less than the rating required for supported elements (780 CMR 704.1).

It should be noted that the primary structural frame includes columns, structural members having direct connections to the columns (including beams, girders, trusses, and spandrels), members of the floor and roof construction having direct connections to the columns, and bracing members essential to the vertical stability of the primary structural frame under gravity loading (regardless if the bracing carries gravity loading).

Nonbearing Exterior Walls & Openings

The rating and opening limitations for nonbearing exterior walls are based on the fire separation distance for each wall. Fire separation distance is defined as the distance measured from the building face to the closest interior lot line, the centerline of a street, alley, or public way, or to an imaginary lot line between two buildings (780 CMR 202). The distance is required to be measured at right angles from the face of the wall. The following table indicates the fire-resistance ratings and opening limitations required for the exterior walls based on fire separation distance (780 CMR 602 & 705.8).

Fire Separation Distance (ft)	Fire Resistance Rating	Allowable Area
0 ≤ X < 3	1 Hour	Not Permitted
3 ≤ X < 5	1 Hour	15%
5 ≤ X < 10	1 Hour	25%
X ≥ 10	0 Hour	No Limit

1 For Group S-1 Occupancies, the required fire resistance rating is 2 Hours (780 CMR Table 602).

The DPW Facility is permitted to have nonrated exterior walls with unlimited openings since the FSD is greater than 10 ft.

Interior Walls and Partitions

Fire/Smoke Resistive Assemblies

The following table identifies the interior walls and partitions which are required to be composed of fire/smoke resistive assemblies.

Type of Assembly	Construction	Code Reference
Corridors	No fire rating required	780 CMR 1020.1
Nonsprinklered Electrical Room [1]	2-hour fire barrier	NFPA 13, 8.15.11.3
Furnace room where any equipment > 400,000 BTU/hr input	Wall capable of resisting the passage of smoke [1]	780 CMR 509.4
Boiler room where the largest piece of equipment is > 15 psi and 10 horsepower	Smoke Tight	780 CMR 509.4.2

[1] Wall must extend from the top of the foundation or floor assembly below to the underside of a fire-resistance rated floor/roof assembly or to the underside of the floor or roof sheathing, deck, or slab above.

Identification

Fire barriers, fire partitions, or any other wall required to have protected openings or penetrations will be permanently identified with signs or stenciling (780 CMR 705.7). The identification will:

- Be located in accessible concealed floor, floor-ceiling, or attic spaces.
- Be located within 15 feet of the end of each wall and at intervals not exceeding 30 feet measured horizontally along the wall or partition.
- Include lettering not less than 3 inches in height with a minimum 3/8 inch stroke in a contrasting color incorporating the suggested wording "FIRE AND/OR SMOKE BARRIER – PROTECT ALL OPENINGS".

Doors and Fire Shutters

Doors, fire shutters, and their corresponding components are required to have fire-resistance ratings and meet the required testing standards as specified in the following table. All doors and fire shutters required to be fire-resistance-rated must be designed, installed, and labeled in accordance with NFPA 80 (780 CMR 716.5).

Wall Type	Required Wall Rating	Minimum Fire Door Rating	Performance Criteria for Doors/Shutters [1]	Code Reference
Fire barriers	2-hours	1½-hours	NFPA 252 or UL 10C / NFPA 252 or UL 10B	780 CMR 716.5
Smoke tight	No rating	No rating	No air transfer openings, max 3/4" undercut	780 CMR 509.4.2

[1] All doors are required to be self- or automatic closing and provided with an active latch bolt that will secure the door when it is closed (780 CMR 716.5.9.1).

Through and Membrane Penetrations

Through and membrane penetrations of fire-resistance-rated walls and fire-resistance-rated horizontal assemblies are required to be protected by an approved penetration firestop system installed as tested in accordance with ASTM E 814 or UL 1479, with a minimum positive pressure differential of 0.01 inch of water (780 CMR 714.3 & 714.4). Penetrations of fire-resistance-rated walls must have an F rating of not less than the required fire-resistance rating of the wall penetrated (780 CMR 714.3.1).

Ducts and Air Transfer Openings

Where dampers are installed, they must be listed and bear the label of an approved testing agency (780 CMR 717.3.1). Fire dampers must be tested in accordance with UL 555 and smoke dampers must be tested in accordance with UL 555S. Combination fire/smoke dampers must comply with both test standards.

Fire dampers are required to be rated for 1.5 hours, unless they are installed in a 3-hour or greater assembly, in which case they are required to be 3-hour rated (780 CMR 717.3.2.1). Smoke damper leakage ratings must be Class I or II. Elevated temperature ratings must not be less than 250°F (780 CMR 717.3.2.2). Combination fire/smoke dampers must comply with both rating requirements (780 CMR 717.3.2.3). Refer to 780 CMR 717.3.3 for required damper actuation methods.

Fire, smoke, and fire/smoke dampers are required to be provided with an approved means of access that permits inspection and maintenance of the damper and its operating parts (780 CMR 717.4). Access points are required to have permanent labels with letters that are not less than ½ inch in height that reads "FIRE/SMOKE DAMPER, SMOKE DAMPER, or FIRE DAMPER".

Vertical Openings

The building is 1-story in height with upper mezzanine levels and are not required to be provided with protected vertical openings.

Interior Finishes

Wall and Ceiling Finishes

Interior wall and ceiling finish ratings are classified in accordance with ASTM E 84 or UL 723 based on flame spread and smoke-developed indices (780 CMR 803.1.1). Interior finish classifications are minimally required to be in accordance with those specified in the table below based on the occupancy classifications.

Occupancy Classification	Exit Enclosures	Corridors, Exit Access Stairways/Ramps	Rooms and Enclosed Spaces
A-3	Class A or B	Class A or B	Class A, B, or C
B	Class A or B	Class A, B or C	Class A, B or C
S-1/ S-2	Class A, B or C	Class A, B or C	Class A, B or C

Interior finishes are grouped in the following classes: Class A – flame spread index 0-25, Class B – flame spread index 26-75, Class C – flame spread index 76-200. All classes must have a smoke-developed index that does not exceed 450.

Interior Floor Finish

Floor finishes and coverings of a traditional type, such as wood, vinyl, linoleum or terrazzo, and resilient floor covering materials that are not comprised of fibers are permitted throughout (780 CMR 804.1 Exception). Other interior floor covering materials are required to comply with the requirements of the DOC FF-1 "pill test" (CPSC 16 CFR Part 1630) (780 CMR 804.4.1 & 804.4.2 Exception).

Fire Protection Systems

Automatic Sprinkler Systems

The building is required to be sprinklered throughout in accordance with NFPA 13 (780 CMR 903.2, 780 CMR 903.2.9.1 & MGL c148 s26G).

Fire Extinguishers

Portable fire extinguishers are required in all occupancies within the building and must be selected and installed in accordance with NFPA 10 (780 CMR 906.1).

Fire Alarm and Detection Systems

The building is required to be provided with a fire alarm system throughout (780 CMR 903.4.2). The fire alarm system will be equipped with an emergency voice/alarm communication system installed in accordance with 780 CMR 907.5.2.2.

Emergency Responder Radio Coverage

Emergency responder coverage is required in the building in accordance with 780 CMR 916.

Means of Egress

Occupant Load

The number of occupants is computed at the rate of one occupant per unit of area as prescribed in the following (780 CMR 1004.1.2). The occupant load is permitted to be increased from the occupant load established for the given use where all other requirements of 780 CMR are met (780 CMR 1004.2).

Function of Space	Occupant Load Factor
Assembly, Unconcentrated (Tables and Chairs)	15 net
Locker Rooms	50 gross
Office/ Shops	100 gross
Repair Garages	200 gross
Storage, Building Service Areas	300 gross

Refer to the Life Safety Plans which outline the calculated occupant load for each building.

Egress Width Factors

The required egress capacity for any means of egress component is based on the following capacity factors (780 CMR 1005.3.1 Exception 1 & 1005.3.2 Exception 1):

Stairways (inches of width per person)	All Other Components (inches of width per person)
0.2	0.15

Refer to the Life Safety Plans which outline the calculated occupant load for each building.

Number of Exits

The number of exits required from every story cannot be less than that specified in the following table (780 CMR 1006.3.1), unless otherwise noted within this report.

Occupant Load	Number of Exits Required
1 – 500	2
501 – 1,000	3
> 1,000	4

Two exits or exit access doorways are also required to be provided where the occupant load or common path of travel distances in the following table are exceeded (780 CMR 1006.2.1):

Occupancy	Maximum Occupant Load	Maximum Common Path of Travel Distance
A-3	49	75 feet
B	49	100 feet
S-1/ S-2	29	

Where two exits or exit access doorways are required from any portion of the exit access as outlined above, the exit doors or exit access doorways are required to be placed a distance apart equal to not less than 1/3 of the length of the maximum overall diagonal dimension of the building or area served (780 CMR 1007.1.1 Exception 2).

Accessible Means of Egress

Accessible means of egress are required to be provided from all accessible spaces. Where more than one means of egress is required from any accessible space, the space must be serviced by not less than two accessible means of egress (780 CMR 1009.1).

Exit Access Travel Distance

Exit access travel distances are not permitted to exceed the maximum values specified in the table below (780 CMR 1017.2).

Occupancy	Maximum Exit Access Travel Distance
A-3 / S-1	250 feet
B	300 feet
S-2	400 feet

Refer to the life safety plans for detailed calculations.

Corridors

The width of corridors is not permitted to be less than that specified in the table below or as determined using the egress factors in the previously referenced table based on the occupant load served (780 CMR 1020.2).

Occupancy	Minimum Width
Access to and utilization of MEP equipment	24 inches
With a required occupancy capacity < 50 people	36 inches
Any areas not listed above	44 inches

Where more than one exit or exit access doorway is required, the exit access is required to be arranged such that any dead ends in the corridor do not exceed 50 feet (780 CMR 1020.4).

Occupancy	Maximum Dead End Length [1]
A	20 feet
B	50 feet

[1] A dead end corridor is not limited in length where the length of the dead end corridor is less than 2.5 times the least width of the dead end corridor (780 CMR 1020.4(3)).

Doors

Doors are required to comply with 780 CMR 1010. Major requirements include:

- Minimum clear width of 32" (780 CMR 1010.1.1)
- Level landing on both sides of doors (780 CMR 1010.1.5 & 1010.1.6)
- Swinging in the direction of egress travel with panic hardware when serving more than 49 people, and panic hardware (780 CMR 1010.1.10)
- Doors in a fire-rated wall are required to comply with 780 CMR 716.5 & NFPA 80.

Stairs

Stairways are required to be constructed in accordance with 780 CMR 1011. Major requirements include:

- Minimum clear width off 44" (780 CMR 1011.2)
- Minimum headroom of 80" (780 CMR 1011.3)
- Maximum 7" riser height (780 CMR 1011.5.2)
- Minimum 11" riser depth (780 CMR 1011.5.2)
- Compliant landings at the top and bottom of runs (780 CMR 1011.6)
- Maximum 12-foot vertical rise between landings (780 CMR 1011.8)
- Handrails within 30" of required egress width (780 CMR 1011.11 & 1014.6)

Exit Signage

Exit and exit access doors are required to be marked by an approved exit sign readily visible from any direction of egress travel (780 CMR 1013.1). The path of egress travel to exits and within exits must be marked by readily visible exit signs to clearly indicate the direction of egress travel where the exit or path of travel is not immediately visible. Exit signs within corridors and exit passageways must be placed such that no point is more than 100 feet or the listed viewing distance for the sign, whichever is less, from the nearest visible exit sign. Exit signs are not required in rooms or areas that require only one exit or means of exit access.

Egress Illumination

The means of egress, including the exit discharge, is required to be illuminated at all times the building served by the means of egress is occupied (780 CMR 1008.1). The illumination level is not permitted to be less than 1 foot-candle at the walking surface (780 CMR 1008.2). In the event of power supply failure, an emergency electrical system is required to automatically illuminate all of the following areas (780 CMR 1008.3):

- Spaces that require two or more means of egress.
- Corridors and interior exit access stairways.
- Exterior landings for exit discharge doorways.

The emergency power system must provide power for a duration of not less than 90 minutes (780 CMR 1008.3). The initial illumination must be an average of 1 foot-candle and a minimum at any point of 0.1 foot-candle measured along the path of egress at the floor level. Illumination levels are permitted to decline to 0.6 foot-candle average and a minimum of 0.06 foot-candle at the end of the emergency lighting time duration (780 CMR 1008.4).

Standby/Emergency Power Systems

The standby and emergency power systems are required to be installed in accordance with 780 CMR, 527 CMR 12.00, NFPA 110, and NFPA 111.

The standby power system is required to be provided for the emergency responder radio coverage system (780 CMR 2702.2). The emergency power system is required to be provided for the following building features (780 CMR 2702.2):

- Exit signage in accordance with 780 CMR Section 1013.6.3.
- Means of egress illumination in accordance with 780 CMR Section 1008.3.
- Fire alarm systems.

Fire Department Access Roads

Fire Department access roads are required to be provided such that any portion of an exterior wall of the first story of the building is located not more than 250 feet from fire department access roads as measured by an approved route around the exterior of the building (527 CMR 18.2.3.2.2). The design of the access roads must comply with the following:

- Have an unobstructed width of not less than 20 feet and vertical clearance of 13 feet 6 inches (527 CMR 18.2.3.4.1).
- Have a minimum inside turning radius of at least 25 feet unless otherwise required by the fire official (527 CMR 18.2.3.4.3.1)
- Have a gradient that does not exceed 10% (527 CMR 18.2.3.4.6.1).
- Dead-ends in excess of 150 feet in length must be provided with approved provisions for the fire apparatus to turn around.
- Must be capable of supporting the imposed loads of fire apparatus and provided with an all-weather driving surface (527 CMR 18.2.2.1.1.1).

Accessibility

Buildings in Massachusetts are subject to compliance with the Massachusetts Architectural Access Board Regulations (521 CMR) and 2010 ADA Standards for Accessible Design.

Energy Code

The building is required to comply with 780 CMR 13, which is an amended version of the 2015 International Energy Conservation Code.

Plumbing Fixtures

248 CMR 10.00, *Uniform State Plumbing Code*, regulates the minimum number of plumbing fixtures. The requirements set forth in 248 CMR 10.10(18) Table 1: Minimum Facilities for Building Occupancy apply to plumbing system installation, alteration, or extension projects in which the plumbing work begins on or after June 3, 1994. The minimum number of plumbing fixtures are based upon the use and occupancy classification of the building or space and the population as established by the authority having jurisdiction. The following table outlines the plumbing fixture requirements for the building.

Use Group	Toilets		Urinals	Lavatories	Drinking Fountains	Service Sink
	F	M		Per Sex		
Office	1 per 20	1 per 25	33% substitution	1 per 50	1 per floor	1 per floor
Industrial	1 per 15	1 per 20	1 per 40	1 per 30	1 per 15	1 per floor

Project:

TOWN OF HOLDEN, MA

DEPARTMENT OF PUBLIC WORKS
18 INDUSTRIAL DRIVE
HOLDEN, MA

Weston & Sampson
Weston & Sampson Engineers, Inc.
100 Foxborough Boulevard Suite 250
Foxborough, MA 02035
(508) 698-3034 (800) SAMPSON
www.westonandsampson.com

Consultants:

CODE RED CONSULTANTS

Seal:

REGISTERED ARCHITECT DANIEL G. TENNEY III No. 6688 CAMBRIDGE MA COMMONWEALTH OF MASSACHUSETTS

Revisions:

Rev	Date	Description

PROGRESS PRINT
DATE: 2/6/2020 8:27:56 AM
NOT FOR CONSTRUCTION

Issued For: PROGRESS SET

PROJECT TRUE

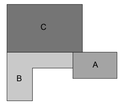

SCALE: AS NOTED

Date:	FEBRUARY 7, 2020
Drawn By:	NO & KL
Reviewed By:	JP
Approved By:	JP
W&S Project No:	2150412

Drawing Title:

CODE SHEET

Sheet Number:

LS0.00

OCCUPANT LOAD SUMMARY TABLE - FIRST FLOOR			
FUNCTION OF SPACE	AREA (SF)	OCCUPANT LOAD FACTOR	OCCUPANT LOAD
CONFERENCE ROOM	306 SF	15 SF	21
MUSTER ROOM	829 SF	15 SF	56
MEN'S LOCKER ROOM	898 SF	50 SF	18
WOMEN'S LOCKER ROOM	433 SF	50 SF	9
GROUNDS SHOP	1,101 SF	100 SF	12
HIGHWAY SHOP	1,087 SF	100 SF	11
OFFICES	4,168 SF	100 SF	42
W&S SHOP	1,659 SF	100 SF	17
VEHICLE MAINTENANCE	6,406 SF	200 SF	33
WASH BAY	1,793 SF	200 SF	9
GROUNDS MEZZANINE	377 SF	300 SF	2
MAINTENANCE MEZZANINE	1,674 SF	300 SF	6
SIGN SHOP MEZZANINE	397 SF	300 SF	2
STORAGE	1,038 SF	300 SF	4
STORAGE MEP	488 SF	300 SF	2
VEHICLE STORAGE	20,143 SF	300 SF	68
WATER MEZZANINE	581 SF	300 SF	2
	43,377 SF		314

EXIT CAPACITY SUMMARY TABLE - FIRST FLOOR						
EXIT #	DOOR WIDTH (INCHES)	DOOR CAPACITY (PERSONS)	STAIR WIDTH (INCHES)	STAIR CAPACITY (PERSONS)	LIMITING CAPACITY (PERSONS)	ACTUAL USE (PERSONS)
EXIT 1	34	226			226	17
EXIT 2	34	226			226	17
EXIT 3	34	226			226	15
EXIT 4	34	226			226	12
EXIT 5	34	226			226	15
EXIT 6	34	226			226	4
EXIT 7	68	453			453	16
EXIT 8	34	226			226	13
EXIT 9	34	226			226	14
EXIT 10	34	226			226	19
EXIT 11	34	226			226	28
EXIT 12	34	226			226	28
EXIT 13	34	226			226	27
EXIT 14	34	226			226	28
EXIT 15	34	226			226	27
EXIT 16	34	226			226	17
EXIT 17	34	226			226	17
					4,069	314

LIFE SAFETY LEGEND

WALL RATINGS

SMOKE TIGHT CONSTRUCTION (NON-RATED) . . . ST

2-HOUR FIRE BARRIER (90 MIN.) . . . . . .

WALL RATINGS SHOWN FOLLOWED BY OPENING PROTECTION REQUIREMENTS IN PARENTHESIS

*60-MINUTE OPENING PROTECTIVES REQUIRED FOR DOORS SERVING 1-HOUR EXIT ENCLOSURES AND 1-HOUR SHAFTS

OCCUPANT LOAD BLOCK

ROOM NAME — SAMPLE ROOM

AREA (SF) — 1,000

OCCUPANT LOAD FACTOR — 100

OCCUPANT LOAD — 10

TRAVEL DISTANCE

TRAVEL DISTANCE TO EXIT — XX'

EXIT BLOCK

EXIT DESIGNATION — EXIT 1

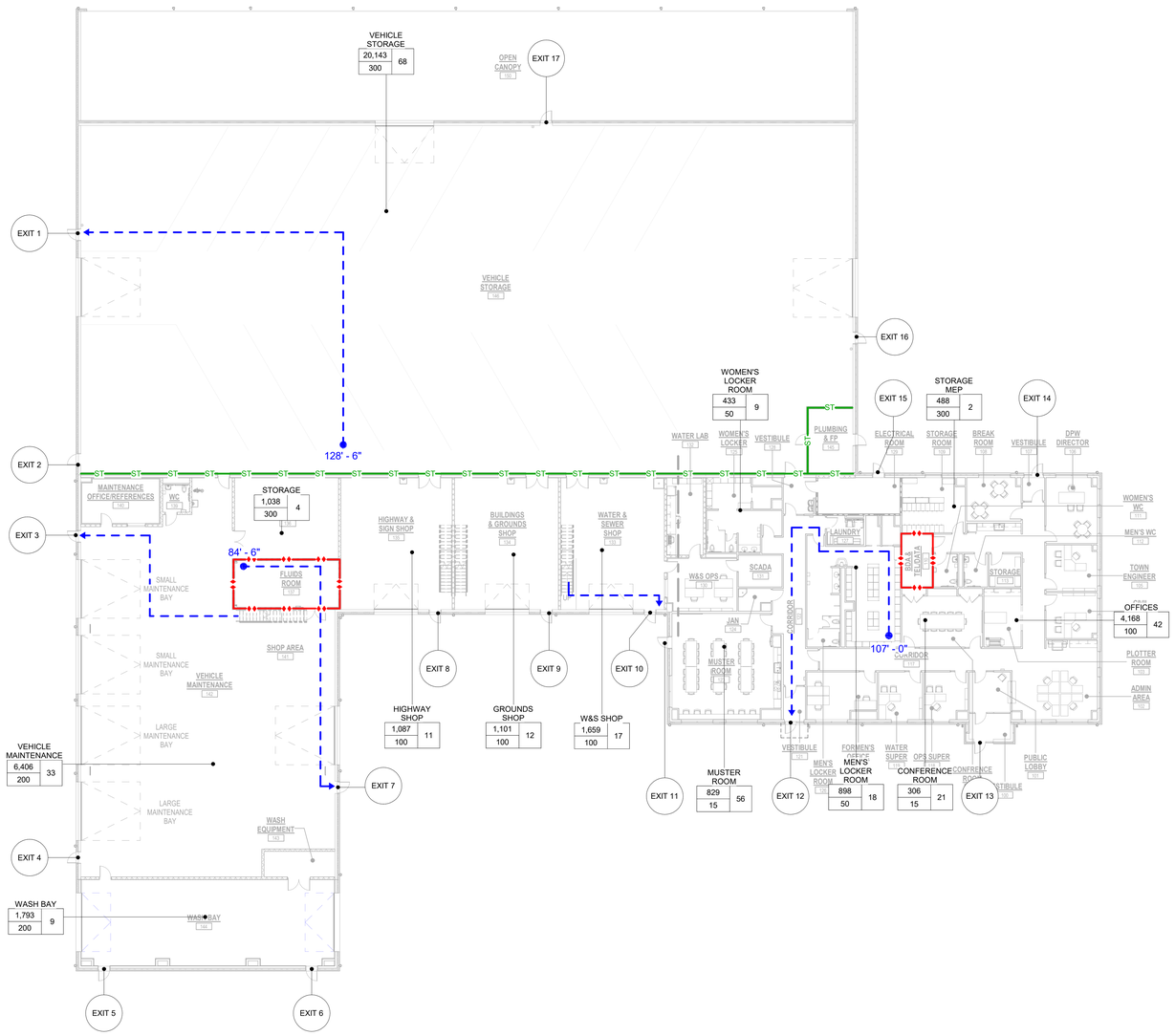

1 FIRST FLOOR
1/16" = 1'-0"

Project:

TOWN OF HOLDEN, MA

DEPARTMENT OF PUBLIC WORKS
18 INDUSTRIAL DRIVE
HOLDEN, MA

Weston & Sampson Engineers, Inc.
100 Foxborough Boulevard Suite 250
Foxborough, MA 02035
(508) 698-3034 (800) SAMPSON
www.westonandsampson.com

Consultants:

CODE RED CONSULTANTS

Seal:

REGISTERED ARCHITECT
DANIEL G. TENNEY III
No. 6688
CAMBRIDGE
MA
COMMONWEALTH OF MASSACHUSETTS

Revisions:

Rev	Date	Description

PROGRESS PRINT
DATE: 2/6/2020 8:27:57 AM
NOT FOR CONSTRUCTION

Issued For: PROGRESS SET

PROJECT TRUE

C A B

SCALE: AS NOTED

Date:	FEBRUARY 7, 2020
Drawn By:	NO & KL
Reviewed By:	JP
Approved By:	JP
W&S Project No:	2150412

Drawing Title:

FIRST FLOOR LIFE SAFETY PLAN

Sheet Number:

LS1.01

OCCUPANT LOAD SUMMARY TABLE - MEZZANINE			
FUNCTION OF SPACE	AREA (SF)	OCCUPANT LOAD FACTOR	OCCUPANT LOAD
GROUNDS MEZZANINE	377 SF	300 SF	2
MAINTENANCE MEZZANINE	1,674 SF	300 SF	6
SIGN SHOP MEZZANINE	397 SF	300 SF	2
WATER MEZZANINE	581 SF	300 SF	2
	3,029 SF		12

EXIT CAPACITY SUMMARY TABLE - MEZZANINE						
EXIT #	DOOR WIDTH (INCHES)	DOOR CAPACITY (PERSONS)	STAIR WIDTH (INCHES)	STAIR CAPACITY (PERSONS)	LIMITING CAPACITY (PERSONS)	ACTUAL USE (PERSONS)
STAIR 1			36	180	180	6
STAIR 2			36	180	180	2
STAIR 3			36	180	180	2
STAIR 4			36	180	180	2
					720	12

LIFE SAFETY LEGEND

WALL RATINGS

SMOKE TIGHT CONSTRUCTION (NON-RATED) . . . . ST

2-HOUR FIRE BARRIER (90 MIN.) . . . . . .

WALL RATINGS SHOWN FOLLOWED BY OPENING PROTECTION REQUIREMENTS IN PARENTHESIS

*60-MINUTE OPENING PROTECTIVES REQUIRED FOR DOORS SERVING 1-HOUR EXIT ENCLOSURES AND 1-HOUR SHAFTS

OCCUPANT LOAD BLOCK

ROOM NAME — SAMPLE ROOM

AREA (SF) — 1,000

OCCUPANT LOAD FACTOR — 100

OCCUPANT LOAD — 10

TRAVEL DISTANCE

TRAVEL DISTANCE TO EXIT — XX'

EXIT BLOCK

EXIT DESIGNATION — EXIT 1

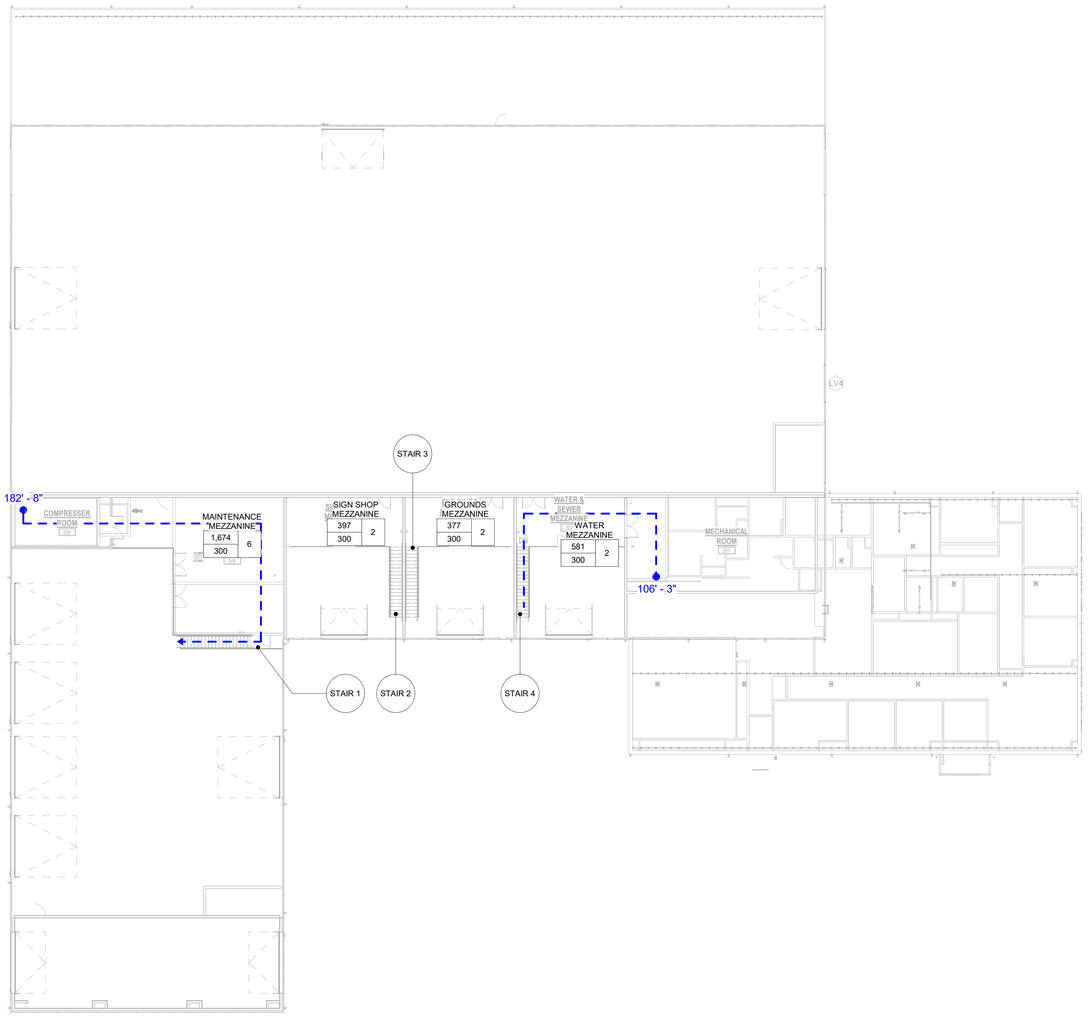

1 MEZZANINE
1/16" = 1'-0"

Project:

TOWN OF HOLDEN, MA

DEPARTMENT OF PUBLIC WORKS
18 INDUSTRIAL DRIVE
HOLDEN, MA

Weston & Sampson

Weston & Sampson Engineers, Inc.
100 Foxborough Boulevard Suite 250
Foxborough, MA 02035
(508) 698-3034 (800) SAMPSON
www.westonandsampson.com

Consultants:

CODE RED CONSULTANTS

Seal:

REGISTERED ARCHITECT
DANIEL G. TENNEY III
No. 6688
CAMBRIDGE
MA
COMMONWEALTH OF MASSACHUSETTS

Revisions:

Rev	Date	Description

PROGRESS PRINT
DATE: 2/6/2020 8:27:58 AM
NOT FOR CONSTRUCTION

Issued For: PROGRESS SET

PROJECT TRUE

C
A
B

SCALE: AS NOTED

Date:	FEBRUARY 7, 2020
Drawn By:	NO & KL
Reviewed By:	JP
Approved By:	JP
W&S Project No:	2150412

Drawing Title:

MEZZANINE LIFE SAFETY PLAN

Sheet Number:

LS1.02

LEGEND:

	VEHICLE STORAGE:	20,504 SF
	EMPLOYEE FACILITIES :	7,570 SF
	SHOPS:	13,905 SF
	CANOPY:	6,507 SF
	BUILDING TOTAL:	**48,486 SF**

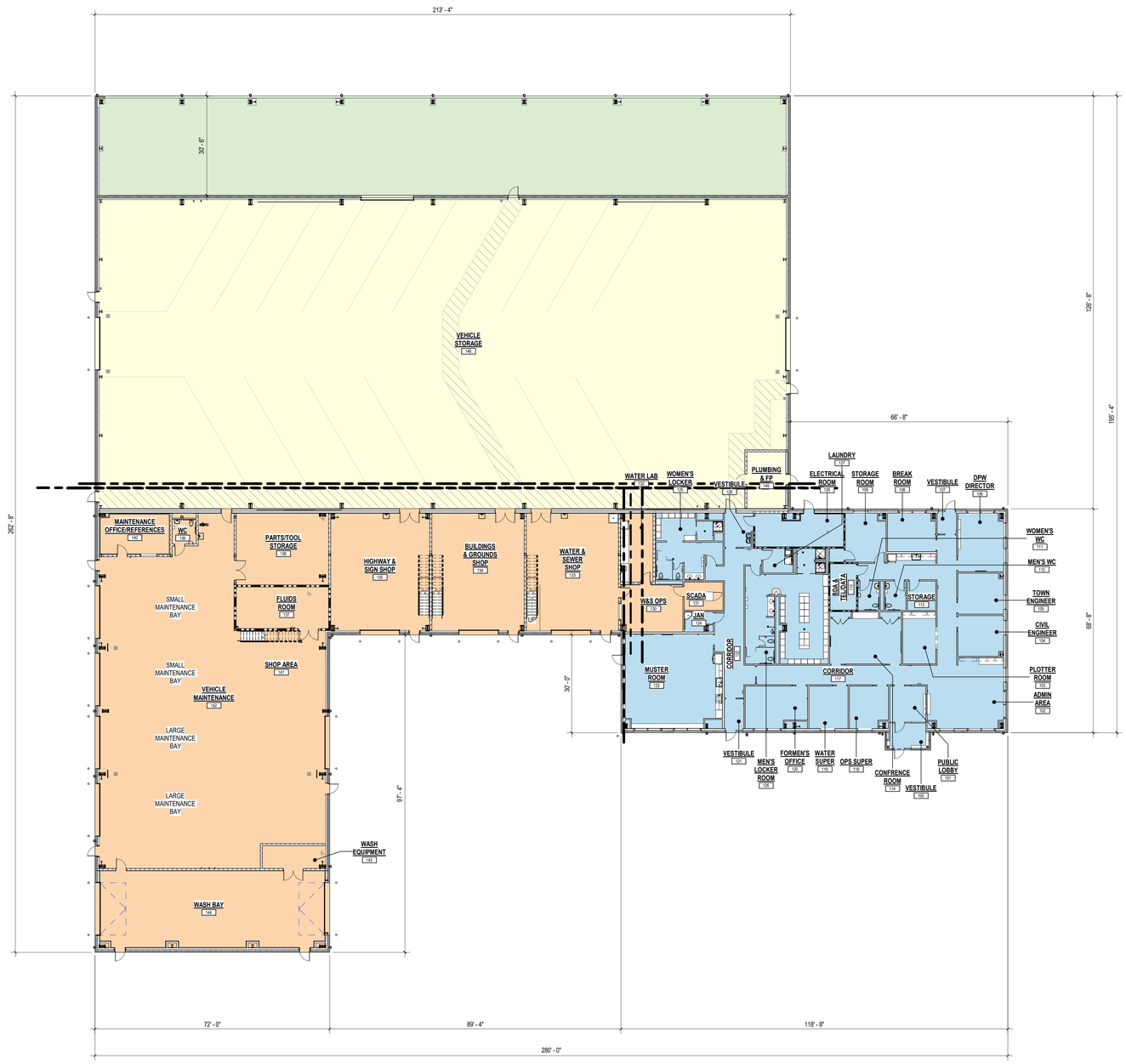

1 OVERALL FIRST FLOOR PLAN
1/16" = 1'-0" 1/ A201

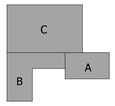

Project:

TOWN OF HOLDEN

DEPARTMENT OF PUBLIC WORKS FACILITY
18 INDUSTRIAL DRIVE
HOLDEN, MA 01520

Weston & Sampson

Weston & Sampson Engineers, Inc.
100 Foxborough Boulevard Suite 250
Foxborough, MA 02035
(508) 698-3034 (800) SAMPSON
www.westonandsampson.com

Consultants:

GARCIA-GALUSKA DESOUSA INC.
CONSULTING ENGINEERS
EST. 1967
Tel. 508-435-7202 • Fax 508-698-9605 • E-MAIL info@g-g-d.com

CODE RED CONSULTANTS

Seal:

REGISTERED ARCHITECT
STANLEY G. TENNIS III
No. 6688
CAMBRIDGE
MA
COMMONWEALTH OF MASSACHUSETTS

Revisions:

Rev	Date	Description

PROGRESS PRINT
DATE: 2/24/2020 2:38:41 PM
NOT FOR CONSTRUCTION

Issued For: PROGRESS SET

PROJECT TRUE

SCALE: AS NOTED

Date:	FEBRUARY 7, 2020
Drawn By:	KKG / BPM
Reviewed By:	JPP
Approved By:	DGT
W&S Project No:	2150412

Drawing Title:

OVERALL FLOORPLAN

Sheet Number:

A105

WALL PANEL TYPES LEGEND:

WP-1: EXTENTS OF WALL PANEL, VERTICAL INSULATED WALL PANELS — 42" TYP

CMU VENEER LEGEND:

CONTROL JOINT LOCATION
- REFER TO DETAILS ON A632 FOR ADDITIONAL INFO — CJ

TYPE 1: STANDARD GROUND FACE MASONRY BLOCK: 8" X 16"

NOTES:
1. COORDINATE OPENINGS NOT SHOWN WITH MEP / FP DRAWINGS.
2. MOCK-UP AREA: SEE SPECIFICATIONS FOR MORE INFORMATION.

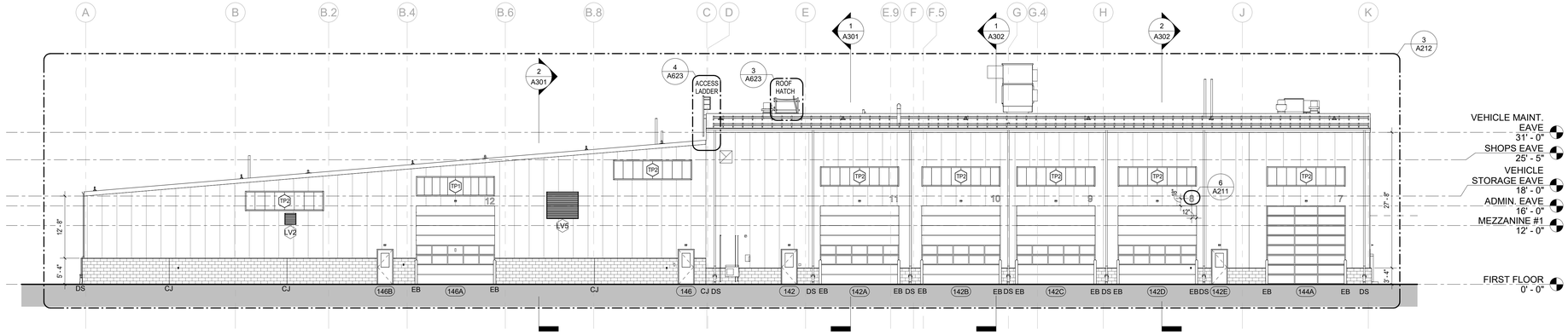

3 WEST EXTERIOR ELEVATION
3/32" = 1'-0" 1/ A101

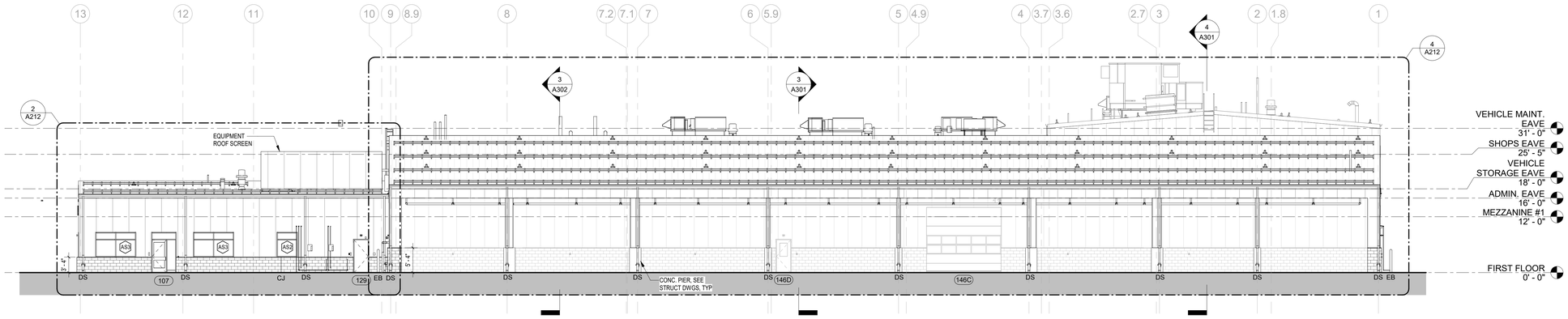

2 NORTH EXTERIOR ELEVATION
3/32" = 1'-0" 1/ A101

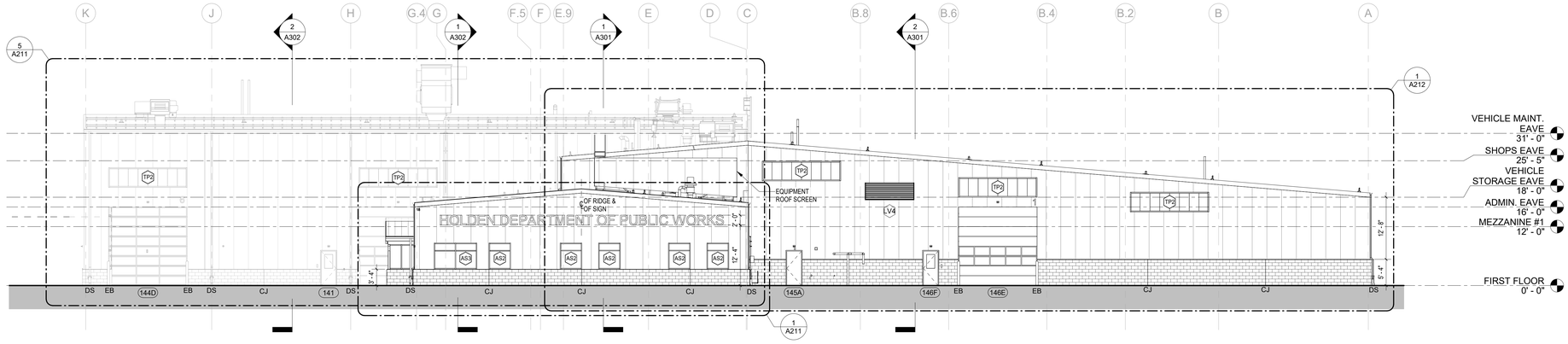

4 EAST EXTERIOR ELEVATION
3/32" = 1'-0" 1/ A101

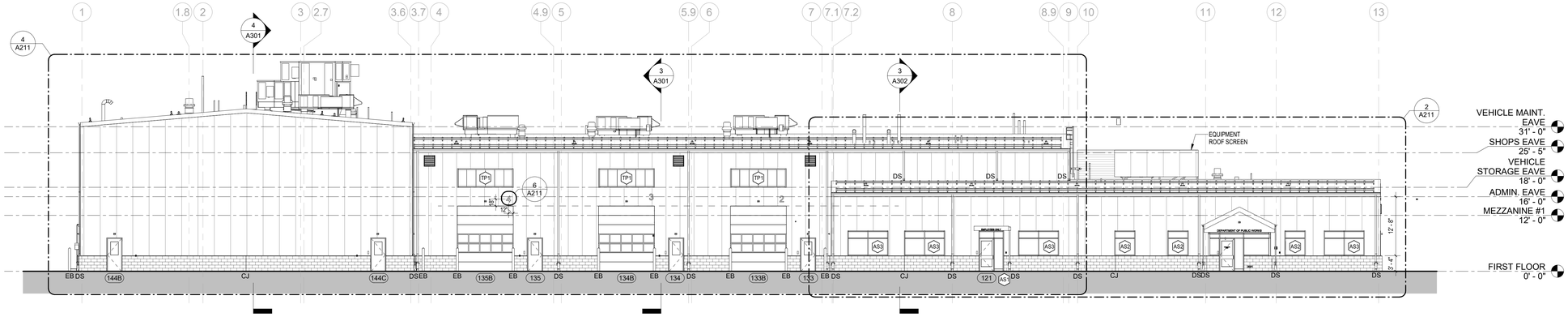

1 SOUTH EXTERIOR ELEVATION
3/32" = 1'-0" 1/ A101

Project:
TOWN OF HOLDEN

DEPARTMENT OF PUBLIC WORKS FACILITY
18 INDUSTRIAL DRIVE
HOLDEN, MA 01520

Weston & Sampson
Weston & Sampson Engineers, Inc.
100 Foxborough Boulevard Suite 250
Foxborough, MA 02035
(508) 698-3034 (800) SAMPSON
www.westonandsampson.com

Consultants:

GARCIA-GALUSKA DESOUSA CONSULTING ENGINEERS INC.
CODE RED CONSULTANTS

Seal:

REGISTERED ARCHITECT DAVID G. TENNEY No. 6688 CAMBRIDGE MA COMMONWEALTH OF MASSACHUSETTS

Revisions:

Rev	Date	Description

PROGRESS PRINT
DATE: 2/24/2020 2:45:01 PM
NOT FOR CONSTRUCTION

Issued For: PROGRESS SET

0' 4' 8' 16'
SCALE: 3/32" = 1'-0"

Date:	FEBRUARY 7, 2020
Drawn By:	KKG / BPM
Reviewed By:	JPP
Approved By:	DGT
W&S Project No:	2150412

Drawing Title:

OVERALL EXTERIOR ELEVATIONS

Sheet Number:

A201

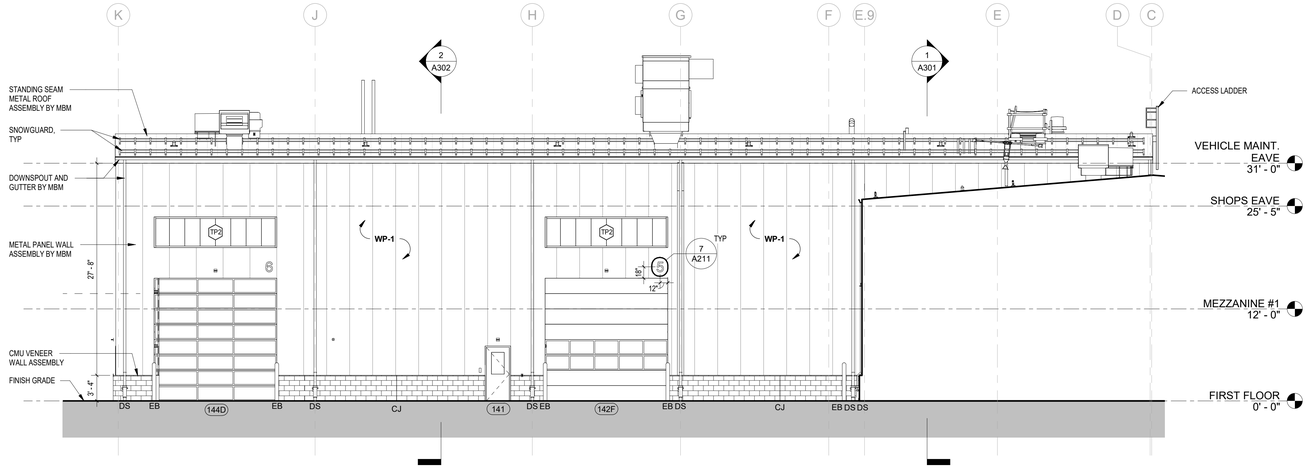

5 LARGE SCALE PARTIAL EAST EXTERIOR ELEVATION
1/8" = 1'-0" 1/ A101

ADDRESS IDENTIFICATION SIGNAGE: IFC 505.1

18

APPLICABILITY:

- VERIFY SPECIFIC REQUIREMENTS WITH LOCAL FIRE CODE OFFICIAL
- CHARACTER HEIGHT - 4" MINIMUM W/ 1/2" STROKE MINIMUM
- COLOR - EASILY IDENTIFIABLE COLOR, CONTRASTING WITH BACKGROUND

8 EXTERIOR SIGNAGE - ADDRESS
1 1/2" = 1'-0" 1/ A211

WALL PANEL TYPES LEGEND:

WP-1: EXTENTS OF WALL PANEL. VERTICAL INSULATED WALL PANELS — 42" TYP

CMU VENEER LEGEND:

CONTROL JOINT LOCATION
- REFER TO DETAILS ON A632 FOR ADDITIONAL INFO — CJ

TYPE 1: STANDARD GROUND FACE MASONRY BLOCK: 8" X 16"

NOTES:
1. COORDINATE OPENINGS NOT SHOWN WITH MEP / FP DRAWINGS.
2. MOCK-UP AREA: SEE SPECIFICATIONS FOR MORE INFORMATION.

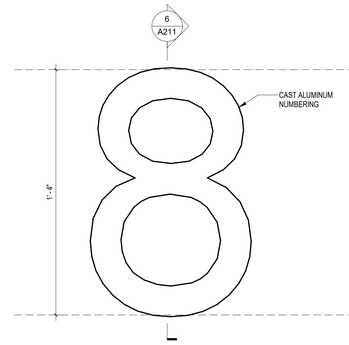

7 BAY NUMBER - ELEVATION
3" = 1'-0" 4/ A211

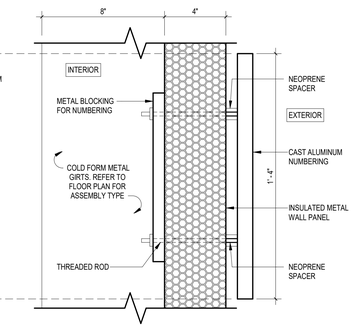

6 SECTION DETAIL - BAY NUMBER
3" = 1'-0" 1/ A201

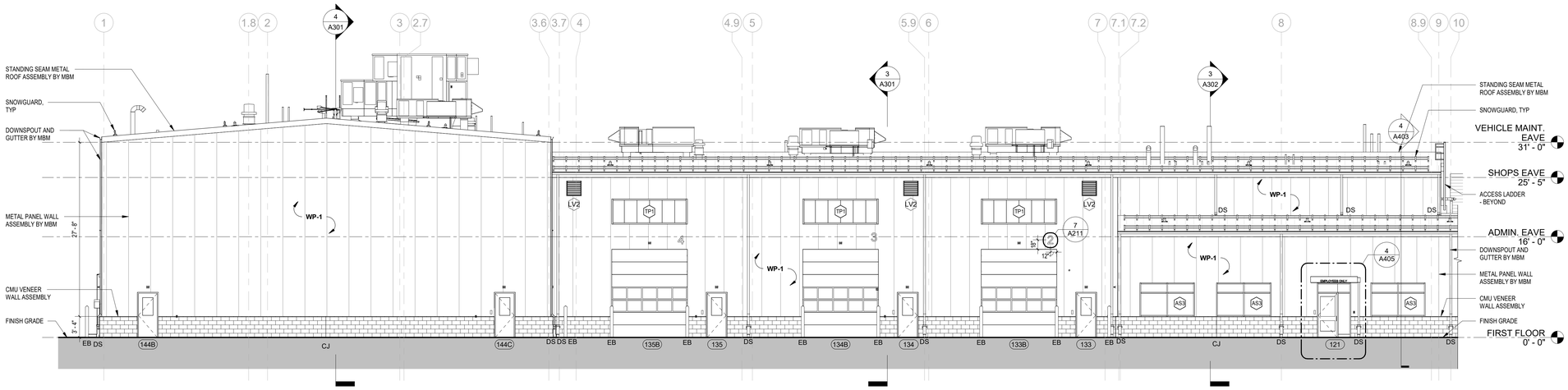

4 LARGE SCALE PARTIAL SOUTH EXTERIOR ELEVATION
1/8" = 1'-0" 1/ A201

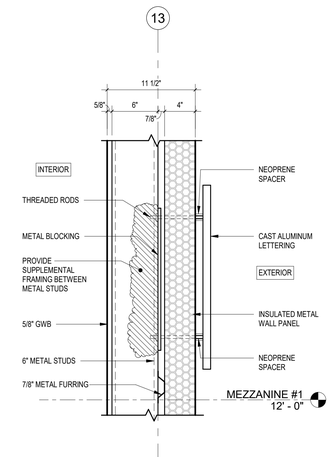

9 SECTION DETAIL - CAST ALUMINUM LETTERING
1 1/2" = 1'-0" 1/ A116

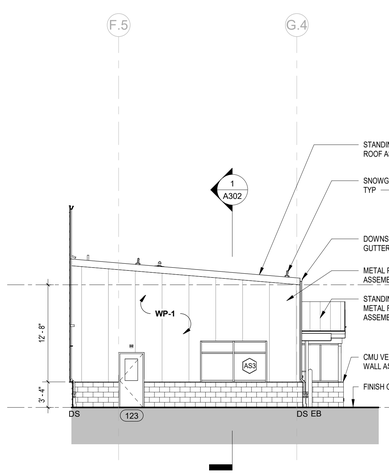

3 LARGE SCALE PARTIAL WEST EXTERIOR ELEVATION
1/8" = 1'-0" 1/ A101

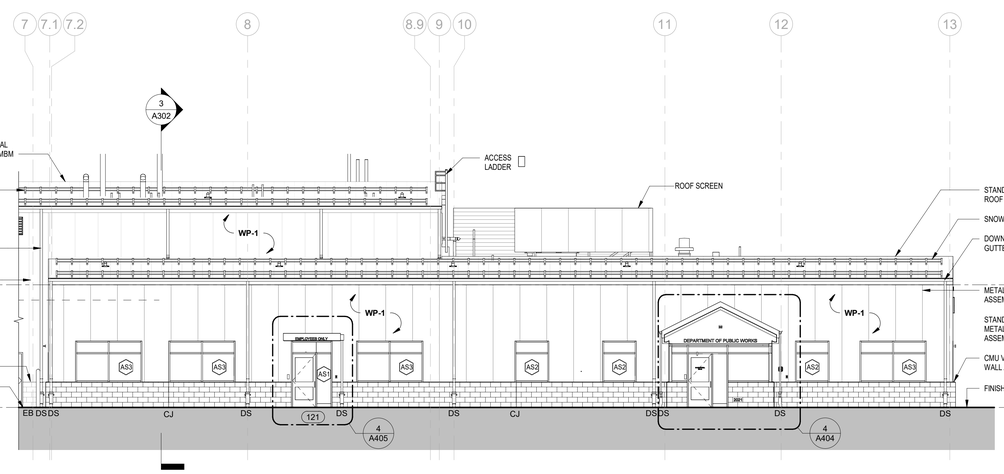

2 LARGE SCALE PARTIAL SOUTH EXTERIOR ELEVATION
1/8" = 1'-0" 1/ A201

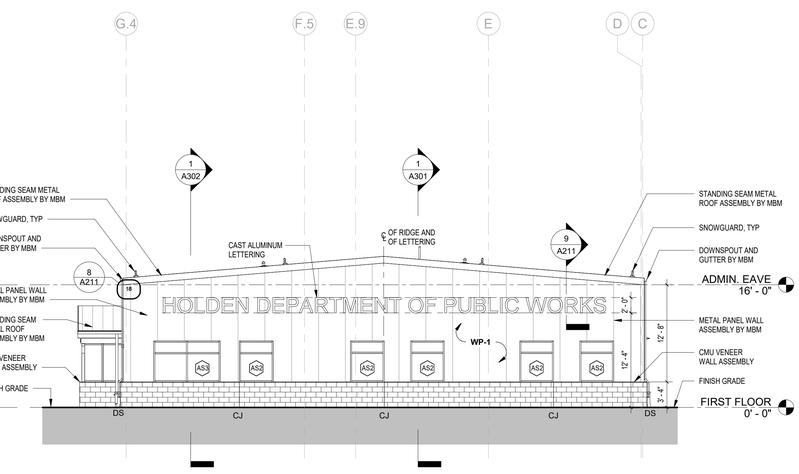

1 LARGE SCALE PARTIAL EAST EXTERIOR ELEVATION
1/8" = 1'-0" 4/ A201

Project:
TOWN OF HOLDEN
DEPARTMENT OF PUBLIC WORKS FACILITY
18 INDUSTRIAL DRIVE
HOLDEN, MA 01520

Weston & Sampson Engineers, Inc.
100 Foxborough Boulevard Suite 250
Foxborough, MA 02035
(508) 698-3034 (800) SAMPSON
www.westonandsampson.com

Consultants:
GARCIA-GALUSKA DESOUSA INC. CONSULTING ENGINEERS
CODE RED CONSULTANTS

Seal:
REGISTERED ARCHITECT DAVID G. TENNEY III No. 6688 CAMBRIDGE MA COMMONWEALTH OF MASSACHUSETTS

Revisions:

Rev	Date	Description

PROGRESS PRINT
DATE: 2/24/2020 2:46:36 PM
NOT FOR CONSTRUCTION

Issued For: PROGRESS SET

0' 4' 8' 16'
SCALE: 1/8" = 1'-0"

Date:	FEBRUARY 7, 2020
Drawn By:	KKG
Reviewed By:	JPP
Approved By:	DGT
W&S Project No:	2150412

Drawing Title:
LARGE SCALE PARTIAL EXTERIOR ELEVATIONS

Sheet Number:
A211

WALL PANEL TYPES LEGEND:

WP-1: EXTENTS OF WALL PANEL, VERTICAL INSULATED WALL PANELS — 42" TYP

CMU VENEER LEGEND:

CONTROL JOINT LOCATION
- REFER TO DETAILS ON A632 FOR ADDITIONAL INFO — CJ

TYPE 1: STANDARD GROUND FACE MASONRY BLOCK: 8" X 16"

NOTES:
1. COORDINATE OPENINGS NOT SHOWN WITH MEP / FP DRAWINGS.
2. MOCK-UP AREA; SEE SPECIFICATIONS FOR MORE INFORMATION.

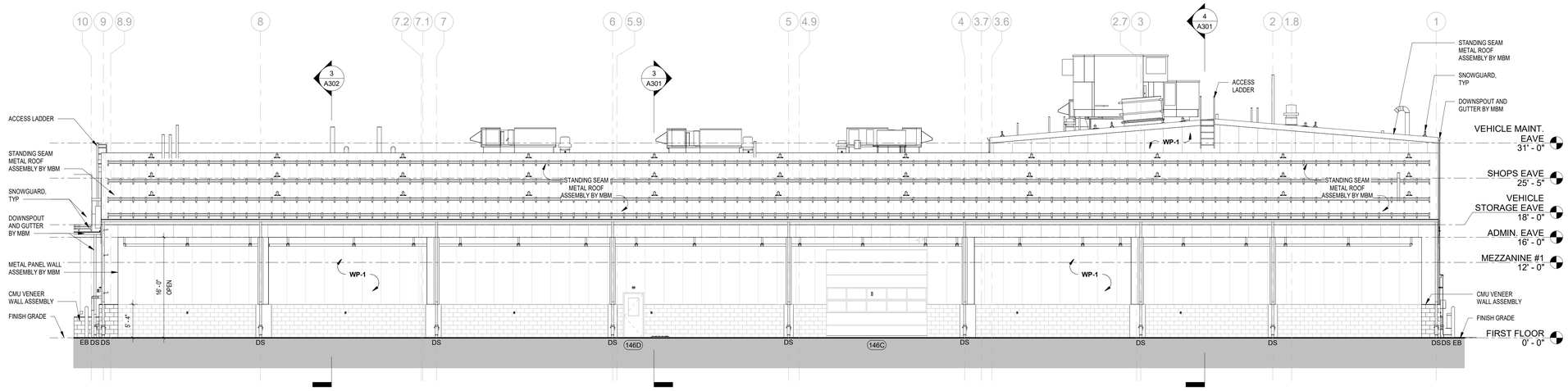

4 LARGE SCALE PARTIAL NORTH EXTERIOR ELEVATION
1/8" = 1'-0" 2/ A201

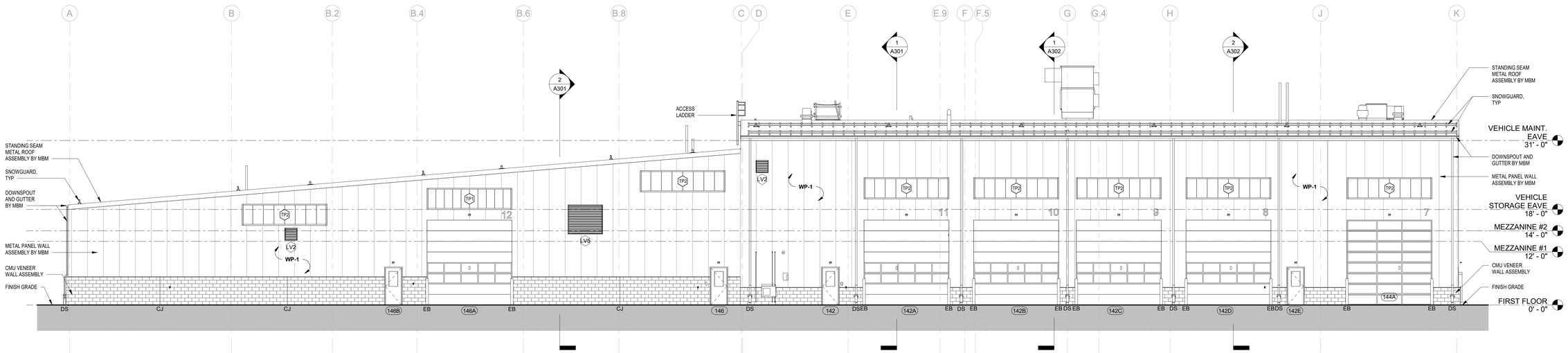

3 LARGE SCALE PARTIAL WEST EXTERIOR ELEVATION
1/8" = 1'-0" 3/ A201

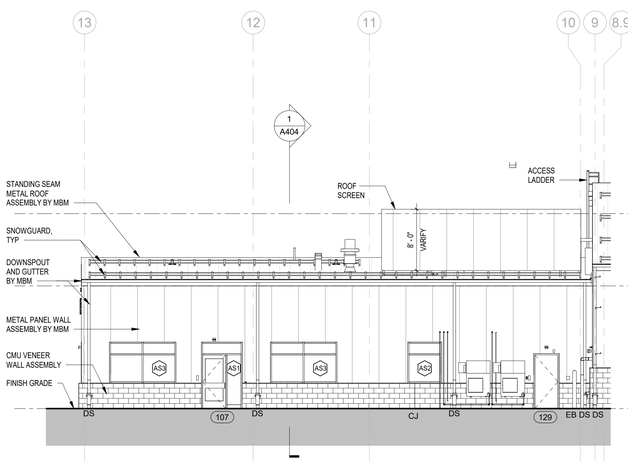

2 LARGE SCALE PARTIAL NORTH EXTERIOR ELEVATION
1/8" = 1'-0" 2/ A201

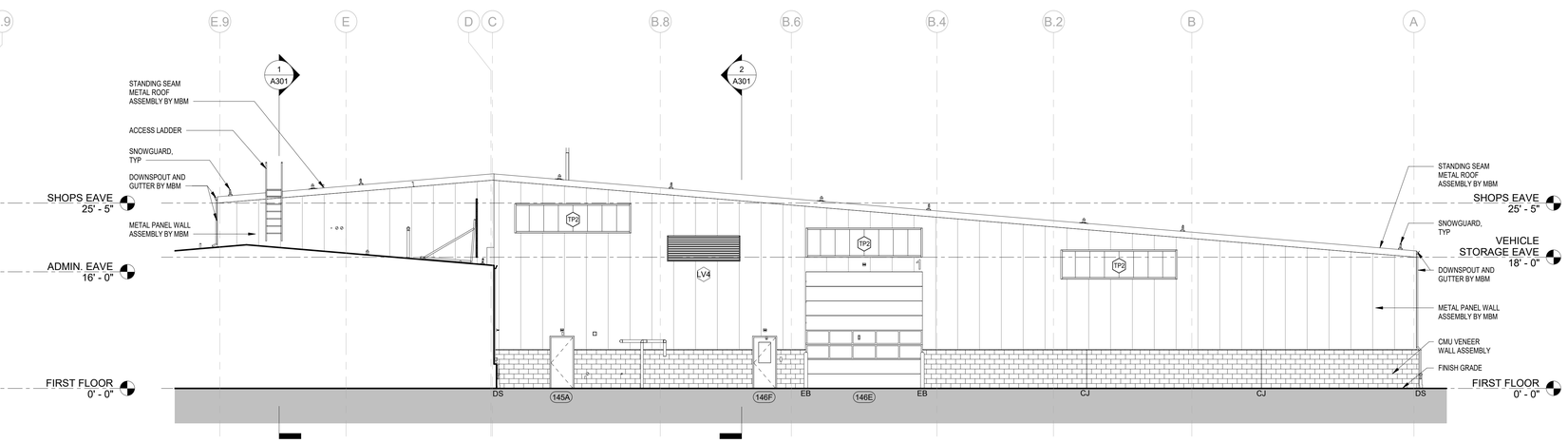

1 LARGE SCALE PARTIAL EAST EXTERIOR ELEVATION
1/8" = 1'-0" 4/ A201

Project:
TOWN OF HOLDEN

DEPARTMENT OF PUBLIC WORKS FACILITY
18 INDUSTRIAL DRIVE
HOLDEN, MA 01520

Weston & Sampson
Weston & Sampson Engineers, Inc.
100 Foxborough Boulevard Suite 250
Foxborough, MA 02035
(508) 698-3034 (800) SAMPSON
www.westonandsampson.com

Consultants:
GARCIA-GALUSKA DESOUSA INC.
CONSULTING ENGINEERS
GGD-DESOUSA
CODE RED CONSULTANTS

Seal:
REGISTERED ARCHITECT DANIEL G. TENNEY III No. 6688 CAMBRIDGE MA COMMONWEALTH OF MASSACHUSETTS

Revisions:

Rev	Date	Description

PROGRESS PRINT
DATE: 2/24/2020 2:48:53 PM
NOT FOR CONSTRUCTION

Issued For: PROGRESS SET

SCALE: AS NOTED

Date:	FEBRUARY 7, 2020
Drawn By:	KKG / BPM
Reviewed By:	JPP
Approved By:	DGT
W&S Project No:	2150412

Drawing Title:

LARGE SCALE PARTIAL EXTERIOR ELEVATIONS

Sheet Number:

A212

NOTE: 3D VIEWS ARE PROVIDED FOR REFERENCE ONLY. REFER TO PLANS, ELEVATIONS, SECTIONS, DETAILS AND SCHEDULES FOR BUILDING REQUIREMENTS.

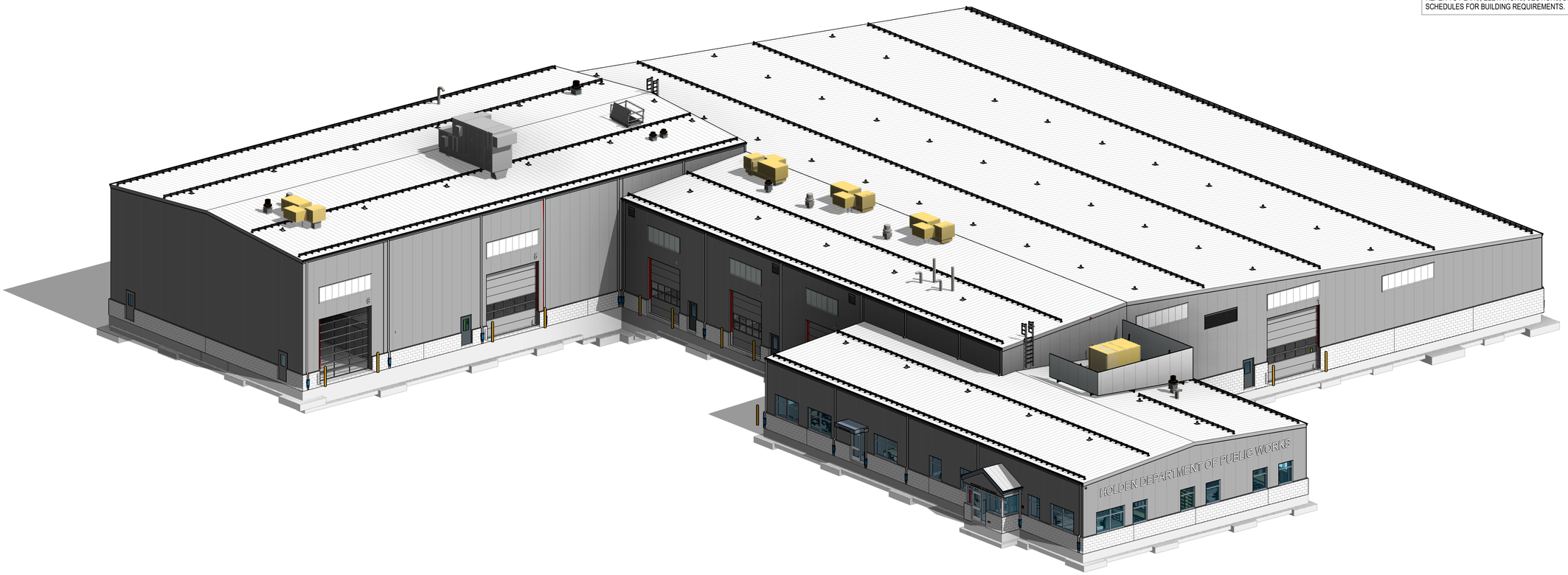

1 Holden DPW - Isometric A

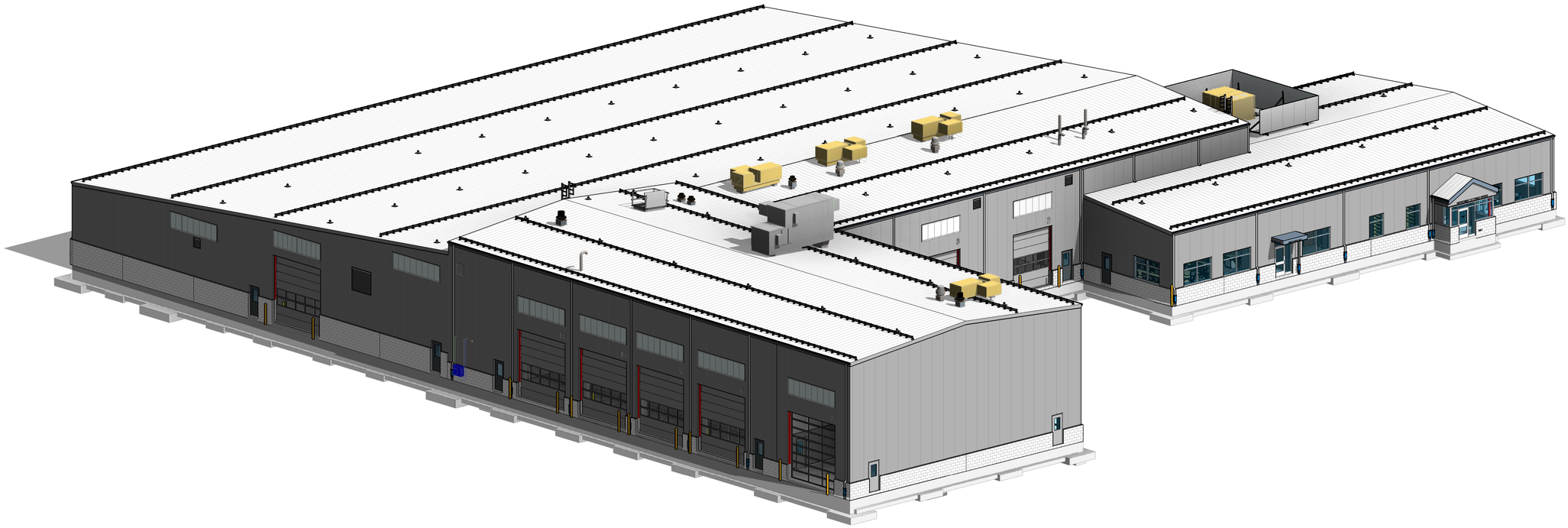

2 Holden DPW - Isometric B

Project:

TOWN OF HOLDEN

DEPARTMENT OF PUBLIC WORKS FACILITY
18 INDUSTRIAL DRIVE
HOLDEN, MA 01520

Weston & Sampson

Weston & Sampson Engineers, Inc.
100 Foxborough Boulevard Suite 250
Foxborough, MA 02035
(508) 698-3034 (800) SAMPSON
www.westonandsampson.com

Consultants:

GARCIA-GALUSKA DESOUSA, INC.
CONSULTING ENGINEERS
EST. 1967
617-482-1520 • Fax 508-896-8671 • GARD, info@g-g.com

CODE RED CONSULTANTS

Seal:

REGISTERED ARCHITECT
DAVID G. TENNEY III
No. 6688
CAMBRIDGE
MA
COMMONWEALTH OF MASSACHUSETTS

Revisions:

Rev	Date	Description

PROGRESS PRINT
DATE: 2/24/2020 2:55:00 PM
NOT FOR CONSTRUCTION

Issued For: PROGRESS SET

SCALE: AS NOTED

Date:	FEBRUARY 7, 2020
Drawn By:	KKG / BPM
Reviewed By:	JPP
Approved By:	DGT
W&S Project No:	2150412

Drawing Title:

3D VIEWS

Sheet Number:

A221

NOTE: 3D VIEWS ARE PROVIDED FOR REFERENCE ONLY. REFER TO PLANS, ELEVATIONS, SECTIONS, DETAILS AND SCHEDULES FOR BUILDING REQUIREMENTS.

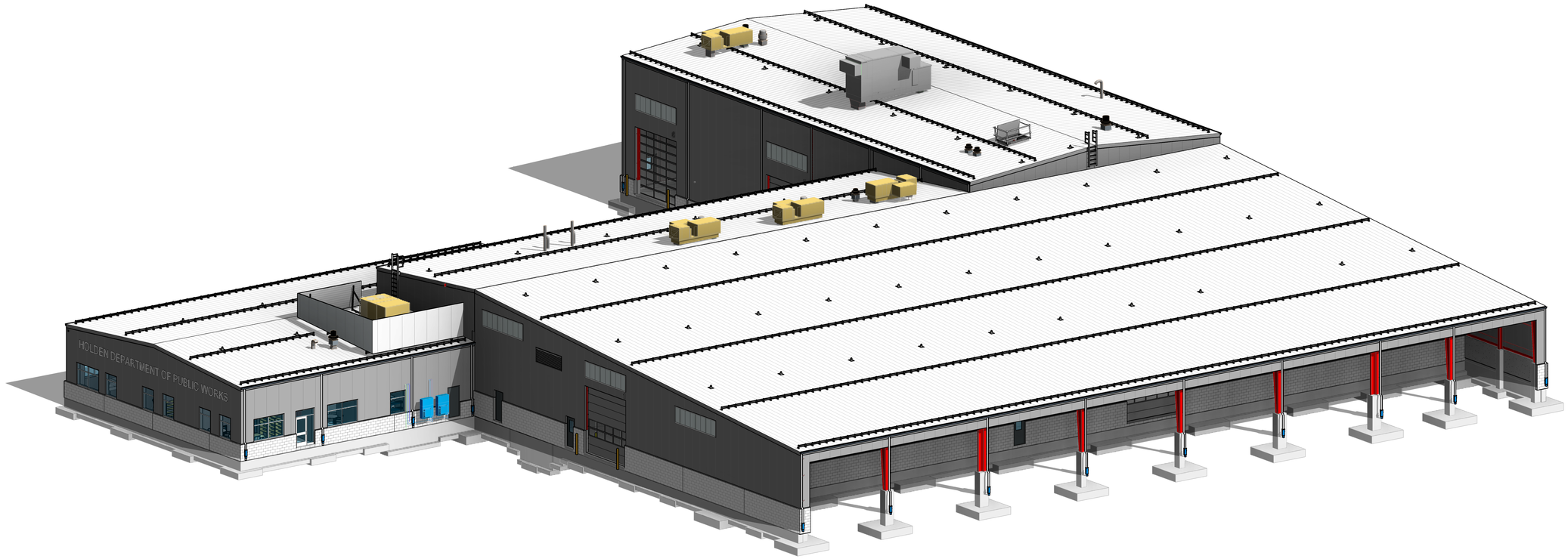

1 Holden DPW - Isometric C

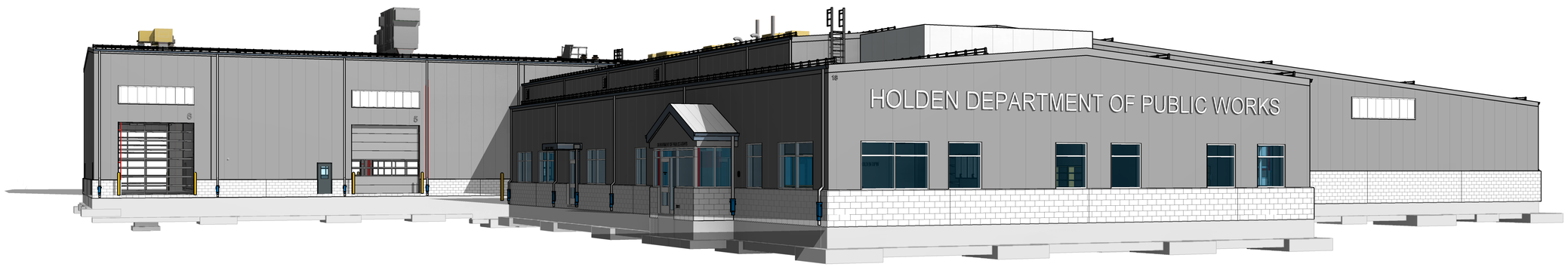

2 Holden DPW - Front Perspective

Project:

TOWN OF HOLDEN

DEPARTMENT OF PUBLIC WORKS FACILITY
18 INDUSTRIAL DRIVE
HOLDEN, MA 01520

Weston & Sampson

Weston & Sampson Engineers, Inc.
100 Foxborough Boulevard Suite 250
Foxborough, MA 02035
(508) 698-3034 (800) SAMPSON
www.westonandsampson.com

Consultants:

GARCIA-GALUSKA DESOUSA CONSULTING ENGINEERS INC.
GGD-DESIGN.COM • 978-667-6211
781-598-7232 • FAX 508-996-8878 • JJONG, MHG@ggdesoc.com

CODE RED CONSULTANTS

Seal:

REGISTERED ARCHITECT
DARRIO G. TENNEY III
No. 6688
CAMBRIDGE
MA
COMMONWEALTH OF MASSACHUSETTS

Revisions:

Rev	Date	Description

PROGRESS PRINT
DATE: 2/24/2020 3:02:05 PM
NOT FOR CONSTRUCTION

Issued For: PROGRESS SET

SCALE: AS NOTED

Date:	FEBRUARY 7, 2020
Drawn By:	KKG / BPM
Reviewed By:	JPP
Approved By:	DGT
W&S Project No:	2150412

Drawing Title:

3D VIEWS

Sheet Number:

A222